ROOM TEMPERATURE STORAGE OF GRAPE JUICE CONCENTRATE

Roderick K. Eskew, Clifford S. Redfield,
Nelson H. Eisenhardt, Joseph B. Claffey
and
Nicholas C. Aceto

Eastern Regional Research Laboratory
Philadelphia 18, Pennsylvania

This supplement provides additional information regarding the storage properties of high-density sweetened Concord grape juice concentrate made by the process described in AIC-342. In that publication the product was recommended for refrigerated or frozen storage as it was canned without "hot-packing". It has now been found that if the product is hot filled at 180° F. into the container, it will store satisfactorily for approximately one year at room temperature. The storage tests were carried out at 73° F.

In order that the resistance to flavor change of the concentrate itself could be judged independently of the container, the test was made in glass bottles. Currently tests are being made with the product hot-packed in enameled cans to judge the resistance of such containers to an acid fruit concentrate at room temperature.

LITERATURE CITED

1. Eskew, Roderick K. High-Density Full-Flavor Fruit Juice Concentrates. *Chemurgic Digest* (to be published).

2. Eskew, R. K., Phillips, G. W. M., Homiller, R. P., and Eisenhardt, N. H. Preparation of Full-Flavor Frozen Grape Juice Concentrates. AIC-301, U. S. Dept. Agr., Bur. Agr. and Indust. Chem. (Eastern Regional Research Laboratory) March 1951.

3. Eskew, Roderick K., Phillips, G. W. Macpherson, Homiller, Richard P., Redfield, Clifford S., and Davis, Rudolph A. Frozen Concentrated Apple Juice. *Industrial and Engineering Chemistry*, Vol. 43, pages 2397-2403. October 1951.

4. Eskew, Roderick K., Redfield, C. S., and Phillips, G. W. Macpherson. High-Density, Full-Flavor Apple Juice Concentrate. AIC-315, U. S. Dept. Agr., Bur. Agr. and Indus. Chem. (Eastern Regional Research Laboratory) August 1951.

5. Griffin, Edward L., Jr., Davis, Lyle, L., Eisenhardt, Nelson H. and Heller, Margaret E. New Progress in Fruit Flavor Recovery. *Food Industries*. Vol. 21, pp. 1545-1547; 1694, 1696, November 1949.

6. Griffin, E. L., Talley, Florence B. and Heller, Margaret E. Comparison of the Essences from Nine Varieties of Apples. *The Fruit Products Journal and American Food Manufacturer*, Vol. 27, No. 1, pp. 4-5; 27, September 1947.

7. Phillips, G. W., Macpherson, Eskew, Roderick K., Claffey, Joseph B., Davis, Rudolph A., and Homiller, Richard P. Experimental Unit for Recovery of Volatile Flavors. *Industrial and Engineering Chemistry*, Vol. 43, 1672-5, July 1951.*

8. Talley, Florence B. Research in New Apple Flavors. *The Manufacturing Confectioner*, Vol. XXVIII, No. 12, 27-28, December 1948.

9. See Code of Federal Regulations, Title 26, Part 198, 1950, Volatile Fruit Flavor Concentrates.

*(Note error on page 1673, column 2, line 12: "0.014-inch" should be "0.104- inch").

TABLE 3.--COST SHEET (Continued)

	Cost Per Day	Cost Per Can
Factory Overhead (Cont'd)		
Indirect Expense (Cont'd)		
Non-Wage Payments		
Social Security	$ 3.20	$
Workmen's Compensation	2.42	
Unemployment Insurance	13.92	
Total Non-Wage Payments	$ 19.54	0.000768
Utilities		
Power		
Process	8.67	
Steam		
Process	22.88	
Water		
Process	6.47	
Total Utilities	$ 38.02	.00149
Miscellaneous		
Maintenance, repairs, and renewals		
Process	87.72	
Gasoline	3.65	
Factory Supplies	13.16	
Miscellaneous Factory Expense	10.00	
Total Miscellaneous	$ 114.53	
Total Indirect Expense	435.24	
Total Factory Overhead	498.47	
Factory Cost	3,372.15	0.1326
Interest on Working Capital	8.46	
Research and Development Expense	44.69	
Administration and General Expense	45.74	
Cost to Make	3,471.04	0.1365

TABLE 3.--Cost Sheet

8 Hours per day. 5 Days per week.	25,427 four-ounce cans/day 1,248 Hours per year. 156 Days per year.	Cost Per Day	Cost Per Can
Prime Cost			
Material			
105.1 lbs. filter aid at $0.025		$ 2.63	$
2,199 lbs. sugar at $.05		109.95	
3,200 gals. grape juice at $.65/gal.		2,080.00	0.0818
19.8 lbs. Pectinol A at $.50/lb.		9.90	
Total		$2,202.48	
Total Material Cost		2,202.48	0.08662
Labor		148.80	0.00585
Total Prime Cost		2,351.28	0.09247
Indirect Materials			
Cans, 25,427 at $.018		457.69	
Cartons, 1,059 at .061		64.60	
Filter Cloth		.07	
$CaCl_2$		.04	
Total Indirect Materials		$ 522.40	0.02054
Factory Overhead			
Indirect Labor			
Supervision		23.08	
Watchmen, yardmen		16.15	
Mechanics, etc.		16.00	
Office help		8.00	
Total Indirect Labor		$ 63.23	0.00249
Indirect Expense			
Fixed			
Insurance, Public Liability and Fire		14.62	
Taxes		29.24	
Interest on Fixed Capital		73.10	
Depreciation		146.19	
Total Fixed Indirect Expense		$ 263.15	.01035

TABLE 2.--Capital Costs

Land and Site Preparation	$ 2,000
Buildings	20,400
Boilers	11,200
Equipment - Manuf.	62,800
Erection of Equipment - Manuf.	15,700
Instrumentation	2,500
Piping and Ductwork	28,200
Erection of Piping and Ductwork	21,200
Heating - Installed	2,000
Lighting - Installed	1,600
Power - Installed	2,200
Freight on Equipment	1,200
Contingencies	22,800
Engineering Fees	34,200
Total Fixed Capital	228,000
Working Capital	53,500
Total Capital	281,500

TABLE 1.--Equipment Summary (Continued)

ITEM NO.	Equipment	ESTIMATED COST
35	Pump: Positive delivery, stainless steel, sanitary type; handles 100 gal. per hr. of 72.8° Brix concentrate.	$ 300
36	Filling machine: 72.8° Brix at 40° F. Viscosity about 2000 centipoises; piston type machine; rated capacity 150-200 4-ounce cans per minute.	4,100
37	Closing machine.	1,800
38	Carton loader: Conveyor belt.	500
39	Carton sealer.	200
40	Cold storage room: Operates at 35° F.; must hold two days' product or 50,900 4-ounce cans; room 12 ft. x 25 ft. x 7 ft.; insulated with 4" cork; requires 3 tons refrigeration.	4,300
	Brine system: Brine tank; 3 ft. x 3 ft. x 5 ft. insulated with 4" cork; two centrifugal pumps.	800
	Refrigeration: Additional for brine system 6.2 tons.	4,100
	Pallets: 35 pallets required, 34" x 41"	200
	Trucks: 3 required; hand lift	1,100
41	Steam jets: Two, with intercondenser for removing the noncondensables from the barometric condenser. (Price included in Item 17).	
42	Barometric condenser: (Price included in Item 17)	
		$62,800

TABLE 1.--Equipment Summary (Continued)

Equipment

ITEM NO.		ESTIMATED COST
21	Condenser: Stainless steel throughout, except carbon steel shell; fixed tube sheets and removable heads; condenses 120 gals. per hr.; 23 tubes, 4 ft. long, 3/4" O.D., 18 ga.; 18.0 sq. ft.	$ 400
22	Essence Metering Pump: Parts in contact with essence to be of stainless steel; 2.7 g.p.h.	200
23	Cooler for Vent Gas: Stainless steel coil, 3/4" diam., 17' long, 18 ga.	
24	Reflux Splitter: Glass and stainless steel.	
25	Cooler for Essence: Stainless steel coil, 1/2" diam., 6' long, 18 ga. Cools 2.7 g.p.h. of essence from 200° to 47° F.	
26	Packed Tube: Stainless steel, 2" diam., 18" high, 3/8" ceramic packing.	
27	Essence receiver: Stainless steel, closed vessel; 50-gal. capacity.	200
29	Ice bath for chilling items 23, 25 and 26.	
	Total Cost for Items 23, 24, 25, 26 and 29.	500
30	Tank: Plain steel with steam jacket and agitator, 400 gal.	500
31	Cooler: Stainless steel throughout except carbon steel shell; fixed tube sheets and removable heads, 7 sq. ft.	200
32	Mixer: Orifice; stainless steel; series of 6 offset orifices in pipe serves as mixer.	100
33	Cooler: Brine; stainless steel throughout, except carbon steel shell; fixed tube sheets, removable heads; product inside tubes; 25 sq. ft.; insulated with 4" cork.	500
34	Holding tank: Stainless steel, closed tank with breather; standard dished heads; top head removable; 100-gal. capacity; insulated with 3" cork.	500

TABLE 1.--Equipment Summary (Continued)

Equipment

ITEM NO.		ESTIMATED COST
13	Filter press: Two required. Plate-and-frame, stainless steel; operates 4 hrs. per press before redressing; each press 18" x 18" x 2" frames; 13 frames in each press.	$ 8,000
14	Heat exchanger (inactivator): Stainless steel throughout except carbon steel shell; tubes 3/8" O.D. x 16 ga., 10 ft. long; 2-pass, 5 tubes per pass; 10 sq. ft.; heats 2267 lbs. per hr. from 65° to 210° F.; holding time of 2 sec. at 210° F. required for inactivation obtained by use of 32 cu. in. holding chamber; for example: 37" of 1" pipe between items 14 and 15.	600
15	Holding tank: For filtered juice, stainless steel, closed tank; standard dished heads; 100-gal. capacity; operates under absolute pressure of 2" Hg.	500
16	Pump: Centrifugal, stainless steel, sanitary type; 4 gal. per min.	200
17	Evaporator: Outside calandria type with separator body and forced feed; all parts in contact with product made of stainless steel; three units, all operated at a pressure of 2" Hg. absolute; the juice flowing continuously through the three units in series; 10 psig steam supplied to calandrias; concentrates 2028.7 lbs. per hr. from 26.9° Brix to 74.9° Brix; total heating surface 35 sq. ft. Price includes piping, condenser, with tail pipe and jets with intercondenser for noncondensables, calandrias, separator bodies, pumps, motors and supports and hogging jet for starting.	7,900
18	Brix control: An automatic device for maintaining the discharged product from the evaporator at 74.9° Brix for control of blending operations.	1,400
19	Pump: Proportioning; stainless steel; mixes 63.57 gals. of concentrate of 74.9° Brix, 2.67 gals. of 150-fold essence, and 33.12 gals. of 72.8° Brix sucrose solution per hr.	2,100
20	Column: Packed, stainless steel shell; packing supports reboiler and accessories; 13" dia. shell packed with 1-1/2" Raschig rings; 9 ft. enriching section; 2 ft. stripping section and 1 ft. spacing; operates at 75% flooding.	1,700

TABLE 1.--Equipment Summary

ITEM NO.	Equipment	ESTIMATED COST
1	Holding tank: Stainless steel, closed tank; standard dished heads, removable top head; bottom discharge; 300 gals. capacity.	$ 1,100
2	Pump: Stainless steel, positive delivery, sanitary type; 7 gpm at 50 psi.	300
3	Preheater: Stainless steel throughout except carbon steel shell; 2-pass, 6 tubes per pass; 10 ft. long; tubes 3/8" O.D., 16 ga.	1,600
4	Vaporizer: Stainless steel throughout except carbon steel shell; 2-pass; 8 tubes first pass, 10 tubes second pass; 1" O.D., 18 ga., 12 ft. long.	3,000
5	Liquid-vapor separator: Stainless steel, 12" dia.; 36" long; 5" dia. vapor inlet; 8" dia. vapor outlet.	600
6	Flash cooling tank: Stainless steel, closed tank; standard dished heads; 100 gal. capacity; operates under vacuum of 28" Hg.	1,400
7	Pump: Centrifugal, stainless steel, sanitary type; 4.1 gpm at 60 ft. head.	300
8	Heat exchanger: Stainless steel throughout, except carbon steel shell; fixed tube sheets; removable heads; cools 2267 lbs. per hr. of 24.1° Brix juice from 101° F. to 65° F.; 37.3 sq. ft.	600
9	Depectinizing tanks: Two required. Stainless clad steel; standard dished heads, top head provided with manhole and breather pipe with activated carbon; side agitator; capacity of each tank 2500 gals.	10,200
10	Tank: For pectinol solution; stainless steel, 50 gals. capacity.	300
11	Pump: Metering; 28 gals. in 8 hours.	300
12	Pump: Centrifugal, stainless steel, sanitary type; 248 gals. per hr. at 35 ft. per head.	200

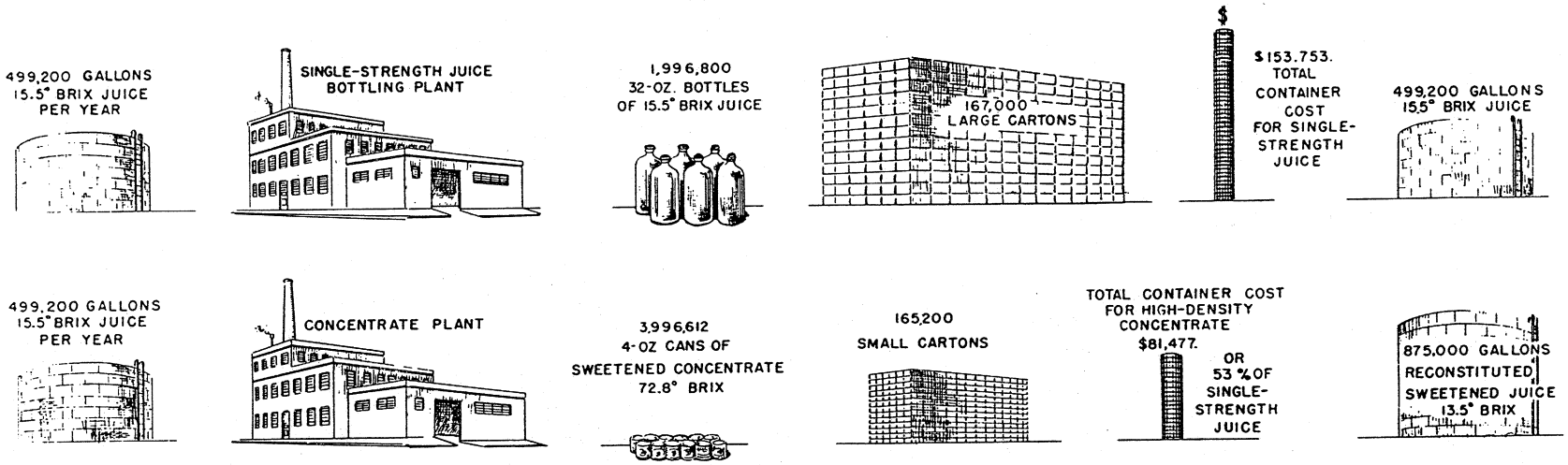

FIGURE 3. COMPARATIVE CONTAINER COST OF HIGH-DENSITY GRAPE CONCENTRATE AND SINGLE-STRENGTH JUICE

1.45 cents per can. The freight on a can of concentrate is only 0.38 cents, a saving of 1.07 cents. The average total saving in packaging and freight may thus be taken as 3.77 cents plus 1.07 cents or 4.84 cents per can.

A similar calculation assuming 16.5° Brix for the bottled juice instead of 15.5° gives the saving as 3.40 cents for packages and 0.99 cents for freight, a total of 4.39 cents per can.

The fact that canned concentrate, manufactured as described, is sweetened, whereas bottled juice may be manufactured sweetened or unsweetened does not affect the above calculation. The two packages are compared on the basis of an equal amount of beverage of equal density.

The amount of sugar which is added will obviously have a great bearing on the output of the plant, the "cost to make" and the price at which the product can be sold. As previously pointed out the amount of sugar which must be added to obtain a desirable sweetness is a function of the acidity and astringency of the juice. This varies widely. For the purposes of the cost estimate, we have assumed a juice requiring the addition of sugar solids to the extent of 50% of the grape solids. The approximate effect of varying the added sugar is shown in Table 5.

TABLE 5.--Effect of Sugar Addition on Costs

(Juice at 65 cents/gallon)

Sugar additions, % of grape solids	45	50	60	70	80
Cans produced per day	24,573	25,427	27,117	28,810	30,506
Cost to make, cents/can	14.01	13.65	13.01	12.45	11.94
Factory sales price, cents/can to obtain 12% on invested capital	18.05	17.58	16.72	15.96	15.29
Retail sales price cents/can	29.96	29.19	27.82	26.59	25.51

Savings in Packing and Transportation.--Packaging and transportation costs are far less for high-density concentrate in small cans than for an equivalent amount of single strength juice in the customary quart bottles. Figure 3 shows the bulk relationships of the two products. A 4-ounce can of high-density (72.8° Brix) concentrate makes 28 fluid ounces of beverage of 13.5° Brix. Bottled grape juice varies somewhat in density according to crop conditions, but we have assumed for this comparison the same density as the juice supplied to the concentrating plant, viz., 15.5° Brix. To show the effect of variation in Brix of bottled juice we will also give figures for 16.5° Brix juice, which is perhaps a representative figure for U. S. Grade "A" bottled juice.

A quart of 15.5° Brix juice, diluted to 13.5° Brix before drinking, will make 37.0 fluid ounces of beverage; it is therefore equivalent to 37.0/28 or 1.32 4-ounce cans of concentrate. Quart bottles and their cartons cost about 7.70 cents; this is equivalent to 7.70/1.32 or 5.82 cents for the equivalent of one 4-ounce can. Four-ounce cans and their cartons cost only about 2.05 cents per can, a saving of 3.77 cents per can. A quart bottle of grape juice weighs about 3.31 pounds, equivalent to 3.31/1.32 or 2.50 pounds per can, whereas a can of concentrate weighs only 0.432 pounds. Freight rates of course vary greatly, but for a typical 200-250 mile haul may be assumed at 58 cents per 100 pounds for bottled juice and 87 cents per 100 pounds for refrigerated shipment of canned concentrate. The freight on a bottle of juice will then be 1.92/1.32 or

has been made for the cost of site preparation. Trucks for transporting the product are assumed to be available as well as the necessary office furniture and fixtures for the new business. The operating season is assumed to be 156 working days, 5 days per week, 8 hours a day with additional time for cleaning. The starting material is taken as the output of the bottling line of an existing single strength juice plant; that is, 400 gallons per hour of settled grape juice of 15.5° Brix. The product will be packed in 4-ounce cans, 3,966,612 per year. The capital investment would be $228,000 with an additional $53,500 working capital. Table 2 shows the items comprising the fixed capital. Table 3 is a cost sheet.

In order to get some idea of what the product should sell for to obtain a reasonable return on the investment after payment of taxes, we have assumed that the single strength juice would be charged into the concentrate plant at 65 cents per gallon. For a clear profit of 12% on the invested capital after payment of all taxes and all expenses, including sales expense, amortization and interest on fixed and working capital, the product would have to be sold by the manufacturer for about 17.6 cents per 4-ounce can. With freight at 0.56 cents, a wholesale markup of 2.59 cents and a retail markup of 8.46 cents, the price to the consumer would be approximately 29.2 cents per 4-ounce can. At this price the resulting 13.5° Brix juice would cost the consumer 1.04 cents per ounce of beverage. This can be compared with 1.07 cents per ounce of beverage which is what the consumer would pay for unsweetened grape juice of the same Brix made by slight dilution of a single strength juice of 15.5° Brix.[2]

The effect of juice price on the cost to make concentrate and on the retail price of concentrate is shown in Table 4.

TABLE 4.--Relation Between Cost of Juice and Concentrate

(Sugar added in an amount equal to 50% of grape solids)

Cost of juice per gal.	$ .50	$ .55	$ .60	$ .65	$ .70	$ .75
Total cost to make, cents/4-ounce can	11.71	12.38	13.01	13.65	14.29	14.92
Factory selling price, cents/4-ounce can to obtain 12% on invested capital	15.41	16.13	16.85	17.57	18.29	19.02
Retail price, cents/4-ounce can	25.70	26.86	28.01	29.19	30.34	31.52

[2]Based on the published average price of 39.4 cents for 32-ounce bottle in Northeast, North Central and Southern U.S. (April to September 1951).

The vapors from the top of the column enter condenser (21). The liquid leaving this condenser will be at about 200° F. It would be undesirable to vent the gases from the system in equilibrium with condensate at this temperature because of the consequent loss in aroma. The vent gas is therefore chilled thoroughly, primarily to ensure complete condensation of its accompanying vapors. This can be accomplished simply by passing the gas and vapors through a precooler (23) and then up through a small packed tube (26) down which flows chilled essence. This precooler and tube, as well as the essence cooler (25), are enclosed in an ice-bath (29). Vent gas scrubbing with water (obtained from the bottom of the fractionating column) which may be necessary in the case of juices containing relatively large amounts of entrained gases, or which are rich in "top notes" of aroma, is not necessary here.

Approximately 1/45th of the condensate is withdrawn from the reflux splitter (24) and after passing through the cooler (25) and the tube (26) it emerges as 150-fold essence which will restore the aroma to the concentrate. The term "150-fold" means that the volume of the essence is 1/150th of the volume of the feed juice. The fold of the essence is thus controlled by the relation between the essence drawoff rate and the juice feed rate after the system has come to equilibrium. The essence is stored in tank (27) and is withdrawn by proportioning pump (19) at the rate of 1 gallon for each 23.8 gallons of 74.9° Brix concentrate.

Sugar Addition.--The amount of sugar to be added to the concentrate is a matter of taste and a function of the acidity and astringency of the juice. We have found that using commercial juices prepared in different years by different manufacturers the amount of sugar solids which must be added to give the same degree of sweetness in the finished product varied from 45% to 82% of the grape solids. We have chosen, for purposes of example, a case where the sugar added amounts to 50% of the grape solids. Each hour there are 63.57 gallons of 74.9° Brix concentrate delivered to pump (19) from the evaporator, and 2.67 gallons of 150-fold essence. These combine to give 66.24 gallons per hour of 72.8° Brix concentrate. Thus to add sugar in the amount of 50% of the grape solids in this mixture there must be delivered to this proportioning pump a third stream amounting to 33.12 gallons per hour of a 72.8° Brix sucrose solution. This is prepared in a steam jacketed steel tank (30) equipped with an agitator. Cooler (31) reduces the temperature from about 200° F. to 100° F. at which temperature this third stream enters proportioning pump (19). The three ingredients are mixed in orifice mixer (32), cooled to 40° F. in (33) and pass to holding tank (34). From here the concentrate is delivered to a piston type filler (36). The product is packaged in 4-ounce cans which after closing in (37) are packed 24 in a carton. The filled cartons are stored in cold room (40) maintained at 35° F. The tartrates which precipitate on concentration and in storage constitute no problem, since on reconstitution they dissolve readily.

COSTS

In estimating the cost to produce high-density concentrate, it is assumed that the concentrate plant will be an adjunct to an existing grape juice plant. It is further assumed that adjacent fenced in land is available as are roads, parking areas and a railroad siding. Allowance, however,

Depectinization and Clarification.--The next step is depectinization of the stripped juice so it can be concentrated without jelling. This is conveniently done by adding a commercial pectinase such as Pectinol W[1]. The pectinase, one pound per 100 gallons of juice, is dissolved in a small quantity of juice and is added continuously from tank (10). Depectinization proceeds during the day as the juice accumulates and continues during the night. Fermentation should not occur during depectinization, since the stripped juice is sterile as it leaves vaporizer (4), but further to insure against fermentation the juice is cooled in heat exchanger (8) to approximately 65° F.. Depectinization tanks (9) are stainless steel clad with a number 4 finish on the interior to facilitate keeping them in a sanitary condition. Each tank breathes through an activated carbon filter.

The heat treatment given during essence stripping precipitates some proteins and the depectinization further develops insolubles. Hence filtration follows depectinization. Stainless steel plate and frame filter presses may be used (13). The cloths are precoated with a filter aid such as Dicalite Special Speed Flow[1]. An additional 5 pounds of the filter aid is added to each 100 gallons of juice.

To avoid the development of cloud in the filtered juice, the enzyme is inactivated immediately after filtration. We have found that 2 seconds at 210° F. is sufficient to accomplish this without affecting flavor. It is done in inactivator (14) which consists of a rapid heater followed by 3-foot section of 1-inch pipe located between the heater and the vacuum feed tank (15). In this tank the juice is cooled by flashing; this increases its density to 26.9° Brix.

Juice Concentration.--If the aroma has been concentrated to an essence of 150-fold, the stripped juice must be concentrated to 74.9° Brix, so that when the essence is incorporated the product can be diluted with 6 volumes of water to yield a beverage of 13.5° Brix. Experience has shown that a 28-inch vacuum gives a product which will retain its flavor satisfactorily for upwards of a year at 35° F. Whether or not higher temperatures during evaporation can be tolerated and still have an acceptable product is not known. Evaporator (17) shown in the example is a forced circulation external calandria 3-body unit with equal vacuum on all bodies. The juice is fed at 26.9° Brix. It is automatically drawn off at 74.9° Brix by a density control device (18). The concentrate from the evaporator flows to proportioning pump (19) where it joins two other streams of material. One of these is 150-fold essence, now to be discussed.

Essence Preparation.--Return now to separator (5) from which the aroma-bearing vapors emerge. They were derived from 30% by volume of the juice, hence the aroma in the vapors is concentrated about 3-fold as they enter fractionating column (20). They must be further concentrated to 100 or more fold (150-fold in this example) so when added to the concentrated juice the latter is not objectionably diluted. The column is a 13-inch diameter insulated stainless steel tube 12 feet high, packed with 1-1/2-inch Raschig rings to a depth of 9 feet in the enriching section and 2 feet in the stripping section. A 1-foot free space is left between the sections.

[1]Recommendation of this specific product is not implied. Products of other manufacturers may be equally effective.

HIGH-DENSITY FULL-FLAVOR GRAPE JUICE CONCENTRATE

400 GALLONS PER HOUR OF JUICE

3178 4-OZ CANS PER HOUR OF 72.8° BRIX FULL-FLAVOR CONCENTRATE

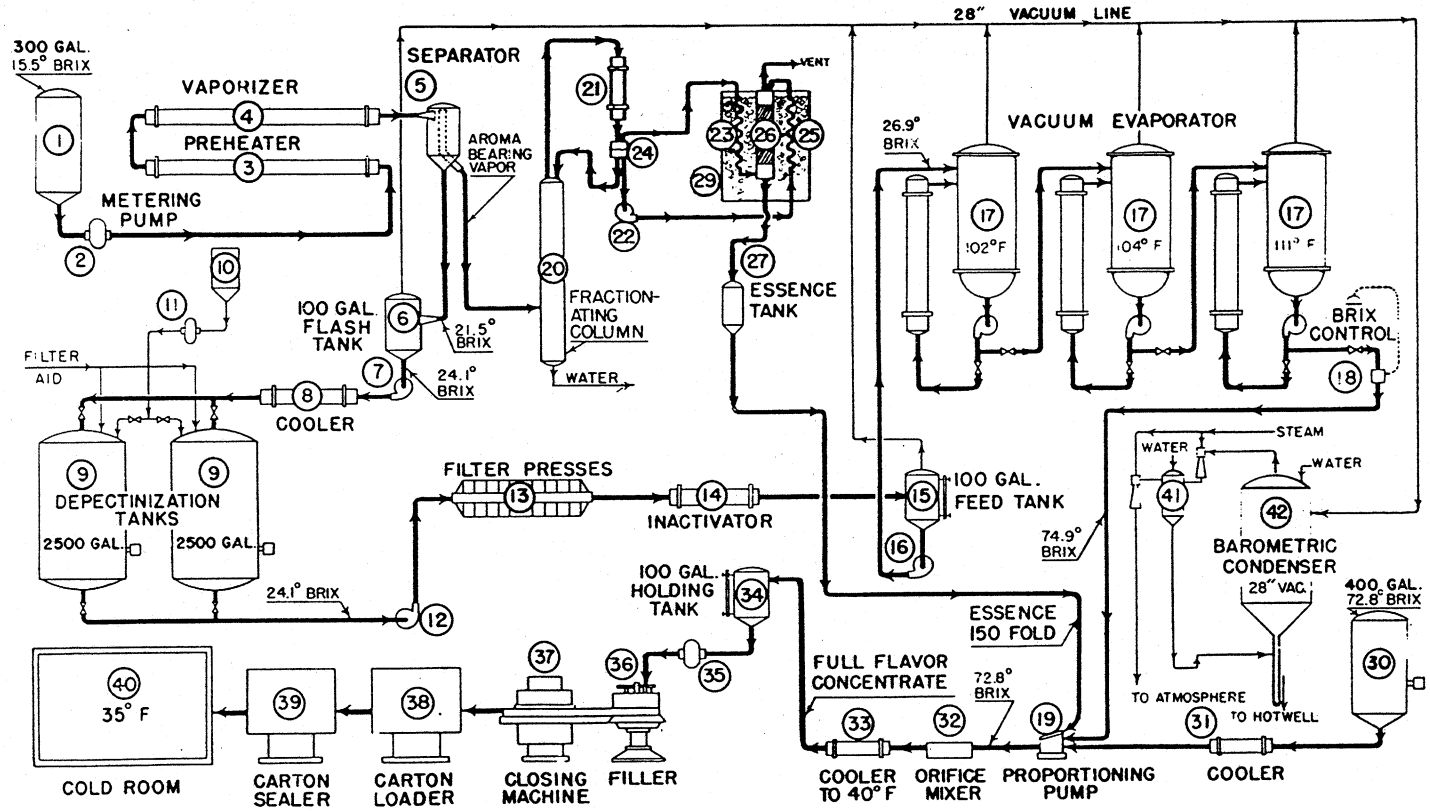

FIGURE 2. FLOW SHEET

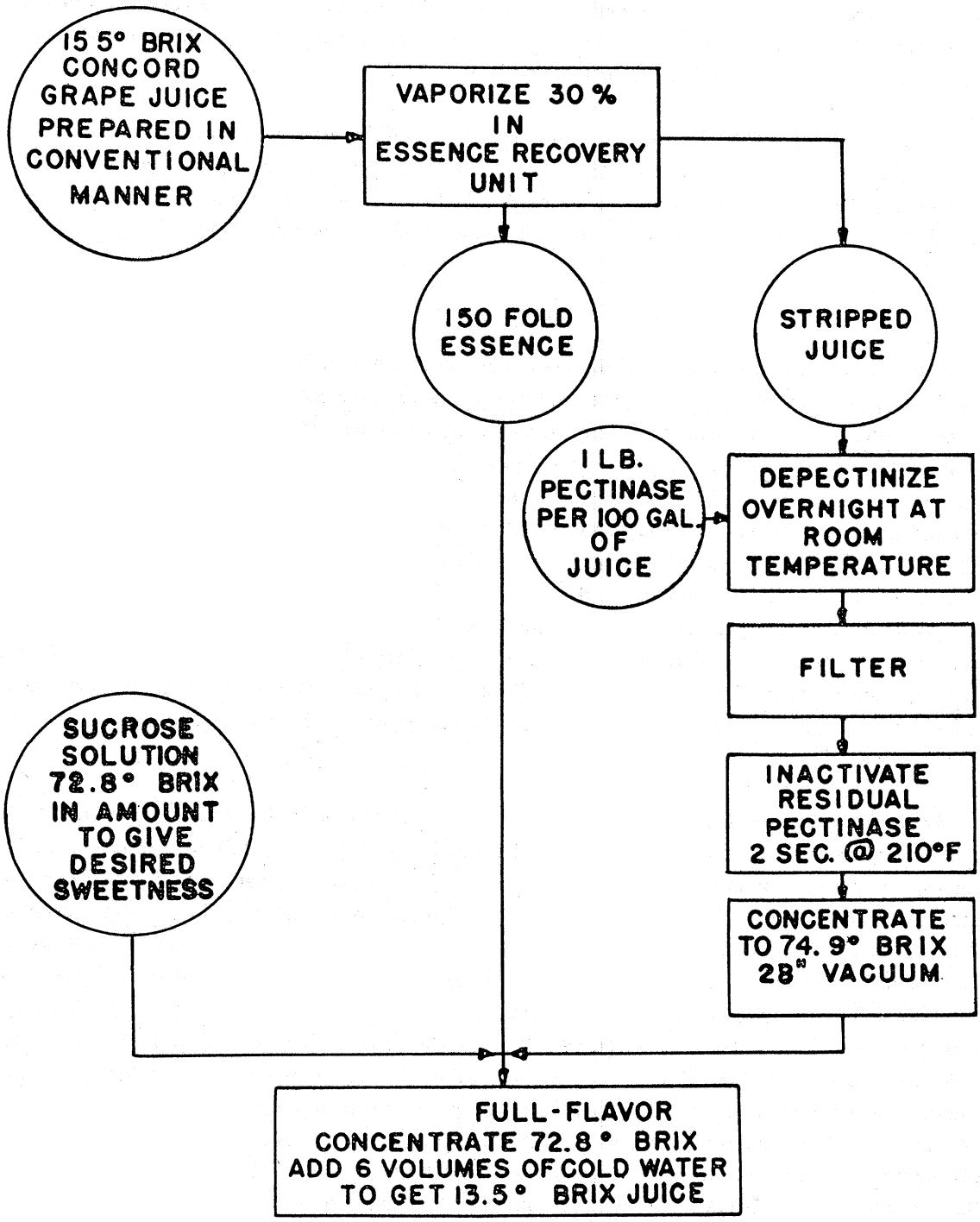

FIGURE 1. STEPS IN MAKING HIGH-DENSITY, FULL-FLAVOR GRAPE JUICE CONCENTRATE

The limiting factor on the degree of concentration is ease of reconstitution. Although grape juice concentrates of 84.5° Brix (7 volumes of water to one volume of concentrate yields 8 volumes of 13.5° Brix juice) have been made, reconstitution is difficult because of the high viscosity. For practical reasons then, a 72.8° Brix product is better.

This article deals with a sweetened high-density (72.8° Brix) Concord grape juice concentrate. As a space saver it is of special interest for use on submarines where space is at a premium. Such a product should also have possibilities for domestic consumption, for example, one 4-ounce can, occupying very small space in the refrigerator, would yield 28 ounces of juice.

PROCESS

A diagrammatic representation of the steps used in making the product is shown in Figure 1. Figure 2 is a flow sheet of the process. The numbers refer to the equipment in Table I where brief specifications for the items and their estimated cost may be found. These particular pieces of equipment, and the sizes and descriptions thereof, are chosen merely to illustrate one way of carrying out the process, and to establish a basis for making a cost estimate. For many of the processing steps described, other apparatus of equivalent functioning can be substituted for that listed here. Moreover, choice of apparatus has been made on a liberal basis, rather than in an attempt to determine the absolute minimum costs. All equipment coming into contact with the product is stainless steel and all pipe and fittings are of the sanitary type. For purposes of illustration, we have chosen a plant receiving 400 gallons per hour of grape juice of 15.5° Brix. Such a plant, if sugar equal to 50% of the grape solids is added, could produce 3,966,612 4-ounce cans of concentrate in a season of 156 days, working 8 hours per day. The choice of sugar quantity is discussed later.

Aroma Stripping.--The juice, made in the conventional way with the tartrates settled out as though for use as single strength juice, is fed from tank (1) by positive delivery pump (2) to preheater (3) In the preheater the juice is brought to its boiling point or very slightly above before passing into vaporizer (4). The preheater tubes are of a size and number to ensure that the juice is at all times in turbulent flow. For instance, at a feed rate of 400 gallons per hour the Reynolds number at the entrance end of the tube we have here chosen is over 7000, and, as it leaves, is over 35,000. This ensures uniform heating of the juice and minimizes any tendency toward fouling. In vaporizer (4) 30% by volume of the juice is vaporized. Although this may not be sufficient to quantitatively release all the volatiles, it is adequate for the juice of eastern Concord grapes. The adequacy was determined by a taste panel comparing the starting juice with reconstituted juice the essence in which had been recovered by 30% vaporization. The steam pressure in the jacket of (4) may be regulated manually or automatically by the pressure drop through an orifice located in the vapor line between separator (5) and column (20). The stripped juice and vapor, the latter containing the aroma, are separated in (5). The stripped juice flashes into a small receiving tank (6) which is connected to the vacuum system of the evaporator. The combined steps of vaporizain (4) and flashing into (6) have now raised the Brix to about 24.1°.

HIGH-DENSITY FULL-FLAVOR GRAPE JUICE CONCENTRATE

Roderick K. Eskew, Clifford S. Redfield,
Nelson H. Eisenhardt, Joseph B. Claffey
and
Nicholas C. Aceto

Fruit juice concentrates, especially orange, are now commonplace. Their advantage is their reduced bulk which means lower packaging and transportation costs and convenience in the home refrigerator. Most of these concentrates are 4-fold; that is, upon the addition of three parts of water to one part of concentrate a product of beverage strength results. The general use of a 4-fold concentrate appears to be the consequence of following in the footsteps of the pioneer concentrate--orange. In the case of orange concentrate the "cut-back" principle is used. This consists in adding some fresh juice to the concentrate at the time of manufacture to partially restore fresh flavor. The resulting dilution makes it impractical to package products made by the "cut-back" method at much above 4-fold. This is not true, however, in the case of juices which permit aroma restoration with essence. Why not then with these juices, take full advantage of the concentrate principle and go as far as possible? This has been done in the case of apple (4, 1) and grape (1) through research at the Eastern Regional Research Laboratory. With these fruits the aroma is first stripped from the fresh juice and recovered in a concentrated or essence form (9, 7). The stripped juice is then depectinized and concentrated to the desired degree, full flavor being restored by reincorporation of the essence. The flavor component, essence, is so concentrated that its incorporation entails no significant dilution, hence concentrates can be marketed at much higher density than with the "cut-back" method.

To be acceptable a concentrate must have good flavor, store well, and be easily reconstituted with water. This good flavor has become possible for the first time with apple and grape through the use of the essence recovery and restoration procedure referred to above. Various applications of essence recovery have appeared in publications of the Eastern Regional Research Laboratory (4, 6, 8, 5, 2, 3). High-density concentrates can be successfully stored and distributed frozen by the same procedures used for 4-fold concentrates. Unlike frozen 4-fold concentrates, which will spoil rapidly if the temperature remains at 35° F., high-density concentrates made by the process described here do not necessarily spoil at 35° F. In tests of such concentrates made in our pilot-plant we have experienced no spoilage or deterioration of flavor in a year's storage at 35° F. The procedures involve pasteurization (during essence stripping), handling by sanitary methods, concentration to high sugar content, and storage at low temperature. Positive protection against the possibility of spoilage from micro-organisms which might enter during canning and which might be active at 35° F., at this high density, can, of course, be had by keeping frozen, by aseptic canning or by hot packing. Since the last two named might jeopardize the flavor, freezing is much preferable. To distribute as a frozen product instead of refrigerated would raise the "cost to make" from 13.65 to 13.68 cents per 4-ounce can and the factory sales price from about 17.58 to 17.64 cents.

671

UNITED STATES DEPARTMENT OF AGRICULTURE
AGRICULTURAL RESEARCH SERVICE

HIGH-DENSITY FULL-FLAVOR GRAPE JUICE CONCENTRATE

Roderick K. Eskew, Clifford S. Redfield,
Nelson H. Eisenhardt, Joseph B. Claffey
and
Nicholas C. Aceto

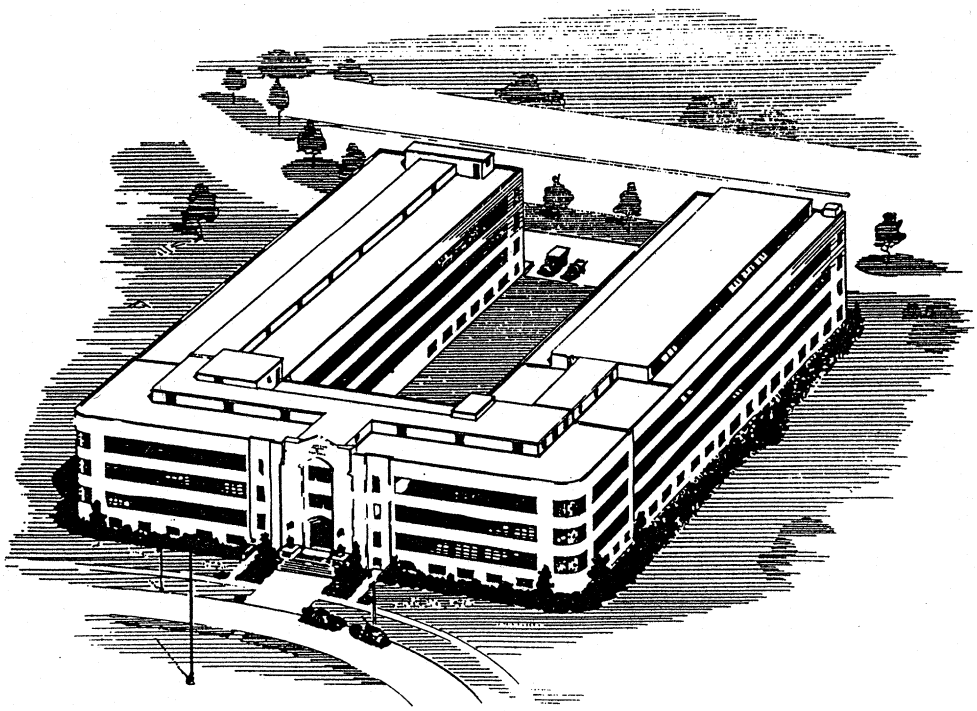

Eastern Utilization Research Branch
Philadelphia 18, Pennsylvania