Pyrolysis of *trans*-Cinnamic Acid, Sodium *trans*-Cinnamate, Styrene, Distyryl, and *cis*- and *trans*-Stilbene. Products and Implications

T. Chin Jones and I. Schmeltz

The title compounds were each pyrolyzed at temperatures ranging from 500 to 900°, and the resulting products and their distributions were determined. Pyrolysates from cinnamic acid and sodium cinnamate comprised chiefly styrene, *trans*-stilbene, phenylnaphthalene, phenanthrene and toluene. Styrene, relatively stable under the pyrolytic conditions, did not likely undergo secondary decomposition in the pathway from cinnamic acid to products. Distyryl was converted mainly into 1-phenylnaphthalene, 2-phenylnaphthalene, naphthalene, and, at higher temperatures, into fluoranthene. Pyrolysis of *cis*- and *trans*-stibene resulted in production of phenanthrene and thermal *cis–trans* isomerization, in addition to the formation of a variety of other products. The numerous products generally obtained and their distributions suggest a multiplicity of mechanistic pathways involving nonfree radical, as well as free radical, intermediates.

During recent years, the pyrogenesis of arenes from other aliphatic and aromatic hydrocarbons has been extensively studied.[1,2] Generally, mechanisms involving recombination of free radical fragments or free radical chains have been favored in explaining product formation.[1–6] On the other hand, evidence for benzyne intermediates has been found in the pyrolyses of phthalic anhydride,[7–9] nitrobenzene,[10,11] acetylene[12] and biphenylene.[13]

In the present work, pyrolysis of stable aromatic systems containing the PhCH=CH– structure was expected to offer reasonably unambiguous results. To this end, styrene, distyryl, *cis*-stilbene, *trans*-stilbene, *trans*-cinnamic acid and sodium *trans*-cinnamate were each pyrolyzed in the range 500–900°. Products, including styrene, *trans*-stilbene, phenylnaphthalene and a variety of other polynuclear aromatic hydrocarbons, could have arisen *via* pyrolytic pathways involving nonfree radical as well as free radical intermediates. The nature of these intermediates may be relevant to the tobacco-health problem[14–16] with which we are concerned.

Results and Discussion

Cinnamic Acid Pyrolysis (Table I).—As early as 1883, decomposition of cinnamic acid, effected by sulfuric acid, was shown to give rise to styrene and a styrene dimer.[17] In the present instance, the major conversion product was also styrene; *trans*-stilbene, phenanthrene, phenylnaphthalene and toluene were among the other products obtained in relatively high yield. Naphthalene, benzene, biphenyl and fluorene yields increased significantly at the higher temperature, and fluoranthene, acenaphthylene and pyrene were found only at 900°. Pyrolysis of styrene (Table II) demonstrated its stability and precluded its intermediacy (secondary decomposition) in the pathway from cinnamic acid to products.

In rationalizing the formation of *trans*-stilbene from cinnamic acid, it is convenient to suggest a simple combination of phenyl and styryl radicals. The relatively high level of *trans*-stilbene compared to that of benzene in the product mixture would argue against such a pathway, however. Furthermore, a low yield of *trans*-stilbene has been noted following the reaction of styryl radical (from cinnamoyl peroxide) and excess benzene.[18] On the other hand, there is precedence for the dimerization of cinnamic acid, under certain conditions, to truxillic and truxinic acids;[19,20] other PhCH=CHR compounds have been known to behave similarly, giving rise to corresponding cyclobutanes.[21,22] In the present instance, therefore, a diphenylcyclobutane type of intermediate (from dimerization of cinnamic acid) could lead to *trans*-stilbene by rupture of appropriate bonds without requiring phenyl participation (Figure 1).

Though according to ultraviolet absorption spectra, 1-phenylnaphthalene was identified as the predominant isomer in the pyrolysate, the 1- and 2-phenylnaphthalenes were insufficiently separated on the gas chromatographic column to be considered individually. However, the occurrence of nearly 3% phenylnaphthalene in conjunction with 1% naphthalene and 0.2% benzene in the product mixture (700°, Table I) was not in accord with exclusive formation of phenylnaphthalene *via* combination of phenyl and naphthyl radicals; previous copyrolysis of benzene and naphthalene had indicated very minor formation of 1-phenylnaphthalene.[23] Formation of 1- and 2-phenylnaphthalenes and 1- and 2-phenyltetralins from a distyryl type of intermediate had

(1) C. D. Hurd and J. I. Simon, *J. Amer. Chem. Soc.*, **84**, 4519 (1962).
(2) C. D. Hurd and A. R. Macon, *ibid.*, **84**, 4524 (1962).
(3) G. M. Badger and R. W. L. Kimber, *J. Chem. Soc.*, 3407 (1961).
(4) G. M. Badger and T. M. Spotswood, *ibid.*, 4420 (1960).
(5) G. M. Badger, S. D. Jolad, and T. M. Spotswood, *Aust. J. Chem.*, **19**, 95 (1966).
(6) G. M. Badger, S. D. Jolad, and T. M. Spotswood, *ibid.*, **19**, 85 (1966).
(7) M. P. Cava, M. J. Mitchell, D. C. DeJongh, and R. Y. Van Fossen, *Tetrahedron*, 2947 (1966).
(8) E. K. Fields and S. Meyerson, *Chem. Commun.*, 474 (1965).
(9) L. Friedman and D. F. Lindow, *J. Amer. Chem. Soc.*, **90**, 2329 (1968).
(10) E. K. Fields and S. Meyerson, *ibid.*, **89**, 724 (1967).
(11) E. K. Fields and S. Meyerson, *ibid.*, **89**, 3224 (1967).
(12) E. K. Fields and S. Meyerson, *Tetrahedron*, 571 (1967).
(13) L. Friedman and D. F. Lindow, *J. Amer. Chem. Soc.*, **90**, 2324 (1968).
(14) E. L. Wynder and D. H. Hoffmann, *Advan. Cancer Res.*, **8**, 269 (1964).
(15) E. L. Wynder and D. H. Hoffmann, *ibid.*, **8**, 362 (1964).
(16) A. B. Linnik, *Vopr. Onkol.*, **12**, 97 (1966).
(17) R. Fittig and E. Erdmann, *Ann.*, **216**, 179 (1883).
(18) D. H. Hey and E. W. Walker, *J. Chem. Soc.*, 2213 (1948).
(19) M. D. Cohen, G. M. G. Schmidt, and F. I. Sonntag, *ibid.*, 2000 (1964).
(20) F. I. Sonntag, *J. Chromatogr.*, **26**, 544 (1967).
(21) F. R. Mayo, *J. Amer. Chem. Soc.*, **90**, 1289 (1968).
(22) H. Shechter, W. J. Link, and G. V. D. Tiers, *ibid.*, **85**, 1601 (1963).
(23) K. F. Lang and H. Buffleb, *Chem. Ber.*, **95**, 1049 (1962).

Table I

Relative Concentrations, Weight Per Cent, of the Products of *trans*-Cinnamic Acid and Sodium *trans*-Cinnamate Pyrolysis

Products[a,b]	Cinnamic acid pyrolysis 700° [c]	900°	Sodium cinnamate pyrolysis 400° [d]	500°	600°	700°	800°	900°
Benzene	0.24	1.76		0.21	0.57	0.34	3.36	5.55
Toluene	2.0	1.92	1.19	6.87	11.24	7.56	13.13	10.64
Ethylbenzene	0.81	1.29		6.99	9.56	5.61	1.70	1.13
Styrene	72.09	60.24	13.62	27.30	28.90	31.53	19.70	15.14
Indene	2.45	1.55	2.14	0.49	1.34	1.81	2.14	2.51
Naphthalene	1.02	5.52		0.53	1.82	3.11	10.08	14.90
Biphenyl	0.09	1.41		0.22	0.44	0.73	3.28	6.33
Diphenylmethane	0.12	0.32	3.97	1.51	1.52	1.38	1.16	
p- and/or *m*-methylbiphenyl				2.11	2.65	1.90	2.17	0.45
Acenaphthylene		0.42						2.08
Acenaphthene							1.46	
Fluorene	0.52	1.80		0.19	0.45	0.84	2.52	2.66
trans-Stilbene	4.36	5.24	22.83	16.80	7.54	9.70	2.40	1.30
Phenanthrene	2.88	5.92	5.46	3.27	0.17[e]	3.89	9.33	10.74
Phenylnaphthalene[f]	2.66	3.30		4.00	8.55	7.86	9.80	7.30
Fluoranthene		0.16			0.10	0.20	1.48	2.31
Pyrene		0.21					1.87	1.97
p- and/or *m*-terphenyl			0.98	2.12	1.75	2.09		
1,2-Benzofluorene	0.07	0.15		0.28	0.36	0.43	0.25	1.35
Grams of neutrals[g]/grams of pyrolysand	0.20[h]	0.3	0.02[i]	0.28	0.31	0.32	0.21	0.18
Grams of ash[j]/grams of pyrolysand	0.0	0.0	0.0	0.32	0.40	0.40	0.37	0.38

[a] Products are listed in the order of their glpc retention times on an SE-30 column. Peak identifications are based on uv, ir spectral comparison with knowns. [b] Standard deviation for relative concentration is ±5%. [c] Standard deviation inside tube temperature is ±10°, except at 400° when it is ±20°. [d] Differential scanning calorimetry of sodium cinnamate showed lower limit of decomposition to be at 415 ± 10°. [e] Some experimental loss occurred. [f] Ultraviolet spectra of collected peak indicated it to be primarily 1-phenylnaphthalene, possibly mixed with some 2-phenylnaphthalene. The two isomers were not separated sufficiently on the column for individual identification. [g] Standard deviation in weights of neutral fraction is ±10%. [h] At 700°, 0.42 g of cinnamic acid was recovered/g of pyrolysand; at 800°, 0.21 g of cinnamic acid was recovered/g of pyrolysand. [i] No recovery of starting material, except at 400°, when 0.88 g/g of pyrolysand was recovered after 8 hr. [j] Ash was mainly carbon with some Na_2CO_3.

Table II

Relative Concentrations, Weight Per Cent, of the Products of Styrene and Distyryl Pyrolysis (N_2)

Products[a,b]	Styrene pyrolysis 700° [c]	800°	900°	Distyryl pyrolysis 500°	700°	900°
Benzene	0.40	2.44	8.90	0.07	1.71	3.26
Toluene	0.31	3.50	2.41	1.20	3.44	2.58
Ethylbenzene	0.21	2.54	0.34		0.45	
Styrene	95.31	68.22	28.05	0.20	0.72	0.86
Indene	0.06	1.02	2.38		4.79	4.13
Naphthalene	0.15	3.05	16.14	1.3	16.35	31.91
Biphenyl	0.01	0.82	8.67	0.35	0.42	1.83
Diphenylmethane	0.02	0.25	0.69	0.3	0.45	
Acenaphthylene		0.35	0.88			
p- and/or *m*-methylbiphenyl				0.61	0.35	0.60
Fluorene	0.11	1.46	3.28			0.72
Bibenzyl	0.15	1.10				
trans-Stilbene	0.87	3.32	1.36	2.80		
Phenanthrene	0.40	5.65	14.79			
1-Phenylnaphthalene[d]	0.28	1.75	2.54	52.40	59.37	36.58
2-Phenylnaphthalene[e]				4.40	5.00	10.86
Fluoranthene		0.05	0.77			4.34
Distyryl[f]				26.0	11.95	0.00
Pyrene		0.11	1.05			
1,2-Benzofluorene		0.10	0.11			
Chrysene		0.33	1.26			
Grams of neutrals[g]/grams of pyrolysand	0.72	0.40	0.35	0.6	0.73	0.60

[a] Products are listed in the order of their glpc retention times on an SE-30 column. [b] Standard deviation for relative concentration is ±5%. [c] Standard deviation for inner tube temperature is ±10°. [d] Relative concentration of either 1- or 2-phenylnaphthalene is approximately ±30%, since they were very poorly separated on the column. Total 1- and 2-phenylnaphthalene is known to about ±10%. [e] 2-Phenylnaphthalene was reported in ref 5 for styrene pyrolysis at 700°. [f] Distyryl is difficult to determine in the presence of pyrene as the peaks elute together. [g] Standard deviation in weight of neutral fraction was ±10%.

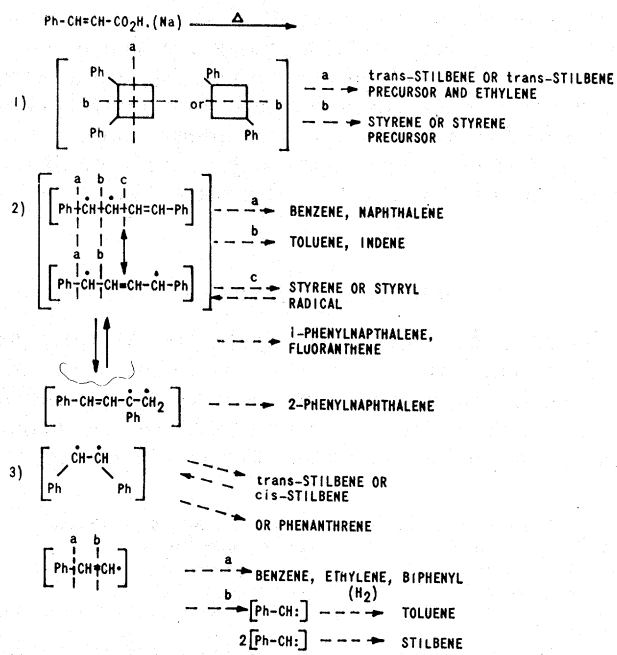

Figure 1.—Summary of intermediates and pathways considered in cinnamic acid and sodium cinnamate pyrolysis.

been postulated for both gas and liquid phase dimerization of styrene,[21,24,25] and such an intermediate may be in operation in the pyrolytic breakdown of cinnamic acid and related compounds as well (Figure 1).

(24) W. G. Brown, *J. Amer. Chem. Soc.*, **90**, 1916 (1968).
(25) P. J. Flory, *ibid.*, **59**, 241 (1937).

Sodium Cinnamate Pyrolysis (Table I).—To provide more complete data on the cinnamate group, sodium cinnamate was pyrolyzed from 400 to 900° in 100° intervals. Differential scanning calorimetry of sodium cinnamate established 415 ± 10° as its decomposition temperature. Thus pyrolysis at 400 ± 20° could distinguish primary from secondary, higher energy decompositions. At these limiting conditions, styrene and *trans*-stilbene yields were still high (Table I). Significant amounts of toluene, diphenylmethane, indene and phenanthrene (but no benzene) were also formed. Decomposition was slow with only 0.02 g consumed in 8 hr. (Contact time was 1–2 sec at all other temperatures.) Though *trans*-stilbene and styrene appeared to be major products even at 400 ± 20°, it cannot be assumed that the same mechanisms were in operation at 400° as at higher temperatures and much shorter reaction times.

Toluene production was examined as a measure of the extent of PhCH=CHR fragmentation to a PhCH fragment. In styrene pyrolysis, Badger[4,5] had postulated toluene formation by loss of a methyl group from ethyl benzene or by cleavage of bibenzyl. However, in the current study direct fission of the PhCH=CHR molecule to PhCH seemed equally reasonable, since no bibenzyl (of comparable stability to *trans*-stilbene)[26] was found in the product mixture. Furthermore, at 400°, toluene, but no ethylbenzene, was produced. At 500°, toluene and ethylbenzene were found in equivalent amounts (Table I). Ethylbenzene yields decreased from 7 to 1% as temperature increased from 500 to 900°. Concurrently, toluene yields varied remarkably little with temperature. In addition mass spectra of cinnamic acid showed *m/e* 91 ($C_7H_7^+$, relative intensity 2.72%) and *m/e* 90 ($C_7H_6\cdot^+$, relative intensity 15.67%), indicating that fission to a seven-carbon fragment (PhCH) is realizable.

We noted decreasing yields of *trans*-stilbene paralleling increasing yields of phenanthrene from 500 to 900° (Table I). Photolytic and pyrolytic studies of *trans*- and *cis*-stilbene had previously revealed *cis–trans* interconversion and formation of phenanthrene from a common intermediate.[27–30] To examine the possibility of a similar formation of phenanthrene from *trans*- or *cis*-stilbene under our pyrolytic conditions, possibly *via* a diradical intermediate, we studied the pyrolysis of both stilbenes in detail (*vide infra*).

Styrene and Distyryl Pyrolysis (Table II).—Products obtained from styrene pyrolysis in the present instance were similar to those reported by Badger.[5,31] He identified 2-phenylnaphthalene,[5,31] however, whereas we found the 1-phenyl isomer predominating in the product mixture. Distyryl was pyrolyzed to probe the feasibility of its intermediacy in decomposition of PhCH=CHR (R = H, $-CO_2H$, $-CO_2Na$) to naphthalene, indene, phenylnaphthalene and fluoranthene (Figure 1).

As predicted, pyrolysis of distyryl did lead primarily to 1-phenylnaphthalene and to smaller amounts of the 2-phenyl isomer (Table II). Naphthalene yields increased with temperature in accord with its postulated production from a phenylbutadiene moiety, the latter a dephenylated distyryl (Figure 1). Pyrolysis of phenylbutadiene is known to form naphthalene.[32]

2-Phenylnaphthalene and fluoranthene were not rearrangement products of 1-phenylnaphthalene, since pyrolysis of the latter (at 700°) had previously been shown to effect only 1% total conversion to naphthalene, biphenyl, 2-phenylnaphthalene and fluoranthene.[33] At elevated temperatures (900°), however, the greater probability of fission and rearrangement was reflected in increased yields of 2-phenylnaphthalene, naphthalene, benzene, toluene and indene and in the appearance of fluoranthene (Table II). 1-Phenylnaphthalene could be formed by ring closure (*i.e.*, dehydrocyclization of distyryl itself or a distyryl type of intermediate). Though participation of a distyryl type of intermediate in the formation of some of the pyrolytic products of PhCH=CHR (R=H, $-CO_2H$, $-CO_2Na$, $-CH=CHPh$) would seem reasonable in this instance, no pathway can be considered exclusive of others under such vigorous thermal conditions.

***cis*- and *trans*-Stilbene Pyrolysis (Table III).**—

TABLE III

RELATIVE CONCENTRATIONS, WEIGHT PER CENT, OF THE PRODUCTS OF *cis*-STILBENE AND *trans*-STILBENE PYROLYSIS (N_2)

	trans-Stilbene pyrolysis		*cis*-Stilbene pyrolysis	
Products[a,b]	700° [c]	900°	700°	900°
Benzene	1.02	3.14	1.08	14.72
Toluene	1.28	1.07	0.72	0.47
Ethylbenzene	0.46			0.25
Styrene	7.96	5.53	4.08	1.68
Indene	0.06	0.66		0.33
Naphthalene	0.14	4.19	4.08	8.33
Biphenyl	0.83	14.10	0.30	12.27
Diphenylmethane	0.69		0.22	
Acenaphthylene		0.16		0.30
p- and/or *m*-methylbiphenyl		3.17		
Fluorene	2.10	5.48	0.72	2.67
cis-Stilbene	16.13		29.71	3.39
trans-Stilbene	53.96	6.98	58.90	21.98
Phenanthrene	1.69	38.40		28.65
Fluoranthene		0.74		1.06
Terphenyl	0.73			
Pyrene		2.82		1.71
1,2-Benzofluorene	0.20	0.11		
Triphenylene		3.57		
Chrysene	2.87			1.07
p- and/or *m*-quaterphenyl		4.46		
Grams of neutrals[d]/grams of pyrolysand	0.46	0.25	0.34	0.27

[a] Products are listed in the order of their glpc elution times on an SE-30 column. [b] Standard deviation for relative weight per cent ±5%. [c] Standard deviation for inner tube temperature ±10°. [d] Standard deviation for weight neutral fraction ±10%.

Besides the previously reported thermal formation of phenanthrene and *cis–trans* isomerization,[27–30] we observed the formation of a variety of other products from stilbene. At 700°, *cis*-stilbene converted mainly into *trans*-stilbene, styrene and naphthalene. Increased phenanthrene and decreased *trans*-stilbene

(26) I. B. Johns, E. A. McElhill, and J. O. Smith, *J. Chem. Eng. Data*, **7**, 271 (1963).
(27) R. Srinivasan and J. C. Powers, Jr., *J. Chem. Phys.*, **39**, 580 (1963).
(28) R. Srinivasan and J. C. Powers, Jr., *J. Amer. Chem. Soc.*, **85**, 1355 (1963).
(29) W. M. Moore, D. D. Morgan, and F. R. Stermitz, *ibid.*, **85**, 829 (1963).
(30) G. S. Hammond, J. Saltiel, A. A. Lamola, N. J. Turro, J. S. Bradshaw, D. O. Cowan, R. C. Counsell, V. Vogt, and C. Dalton, *ibid.*, **86**, 3197 (1964).
(31) G. M. Badger and R. G. Butte, *J. Chem. Soc.*, 2458 (1958).
(32) G. Liebermann and C. N. Riiber, *Ber.*, **35**, 2696 (1902).
(33) J. W. Sweeting and J. F. K. Wilshire, *Aust. J. Chem.*, **15**, 89 (1962).

production at higher temperatures are in accord with the postulated formation of phenanthrene from *cis*- and/or *trans*-stilbene through a common intermediate. Increased benzene and biphenyl formation can be ascribed to the presence of more phenyl radicals at 900°. Styrene formation further indicates loss of a phenyl group from stilbene during the pyrolysis.

Pyrolysis of *trans*-stilbene (at 700°) produced *cis*-stilbene, phenanthrene and styrene among others; some starting material was also recovered. At 900°, the yield of phenanthrene increased while that of *cis*- and *trans*-stilbene decreased. Benzene, biphenyl, styrene, naphthalene and fluorene levels increased with increasing temperature (700–900°). Methylbiphenyl was found at 900° only. No phenylnaphthalene was detected among the pyrolysis products of either *trans*- or *cis*-stilbene. Fluorene formation could correlate with a reported[34] mass spectral fragmentation mechanism for stilbene involving loss of a methyl group from stilbene after its rearrangement to a 9-methylfluorenyl ion. A fluorenyl intermediate could also form a methylbiphenyl upon thermal rearrangement.

On the whole, the foregoing observations supported the initial hypothesis that stilbene could serve as a precursor of phenanthrene, thermally, as well as photolytically.

Toluene Pyrolysis (Table IV).—Toluene was pyrolyzed at 800 and 900° to check its stability and to examine any possible relationships between products from the benzyl radical and those of PhCH=CHR pyrolysis. The thermal stability of toluene was at least equal to, if not greater than, that of styrene (Tables II and IV). Little *trans*-stilbene was produced and no phenanthrene was detected in the pyrolysate. Anthracene which was present in the product mixture is believed to arise *via* combination of two benzyl radicals.[2,4] We found no common patterns between the pyrolysis products of toluene and those of PhCH=CHR (R = H, $-CO_2H$, $-CO_2Na$, Ph, –CH=CHPh).

Table IV

Relative Concentrations, Weight Per Cent, of the Products of Toluene Pyrolysis (N_2)

Products[a,b]	800° [c]	900°
Benzene	0.16	2.62
Toluene	97.55	77.14
Styrene	0.10	0.84
Ethylbenzene	0.12	0.49
Indene		0.12
Naphthalene		0.27
Biphenyl	0.12	2.67
Diphenylmethane		1.01
Acenaphthylene	0.40	4.19
Fluorene	0.85	5.10
Bibenzyl	0.47	1.79
trans-Stilbene	0.17	0.93
Anthracene	0.06	1.66
Phenylnaphthalene		0.10
Fluoranthene		
Pyrene		0.18
1,2-Benzofluorene		0.27
Triphenylene		0.05
Grams of neutrals[d]/grams of pyrolysand	0.26	0.32

[a] Products are listed in the order of their glpc elution times on an SE-30 column. [b] Standard deviation for relative weight per cent ±5%. [c] Standard deviation for inner tube temperature ±10°. [d] Standard deviation for weight neutral fraction ±10%.

Conclusion.—With more and more detailed studies on high-temperature pyrolyses of aromatic and aliphatic hydrocarbons, the complexity of the problem becomes more evident. The plurality of products, especially of fused ring aromatics 800° and up, makes an interpretation based on one or two all inclusive, common mechanisms difficult. Different types of mechanisms may also predominate at different temperatures. Moreover, because of the high-energy conditions, almost any mechanism that will yield the products, even one involving a simple addition of various postulated carbon fragments that will sum up to the proper number of carbon atoms in the products, can be made plausible.

Certain interpretative advantages are offered by pyrolysis of the PhCH=CHR system, since the aromatic moieties are known to be relatively stable under the reaction conditions. The current studies represent the first of a series in which we expect to investigate various possible nonfree radical intermediates in high-temperature pyrolysis. Further work is planned involving the use of isotopically labeled compounds and pyrolysis of various model compounds, such as cyclobutanes. Rapid flow techniques will be utilized to clarify the contact time and kinetics of the reactions.

Figure 1 summarizes several of the pyrolytic pathways suggested by some of the products. Though no cyclobutanes were found in the products, they may be too unstable to be trapped in the temperature range 400–900°. However, they could still serve as precursors for styrene and stilbene in the pyrolyses, especially at lower temperatures. A phenylcarbene intermediate cannot be eliminated either since there is substantial toluene formation, indicative of PhCH fragment formation. Other products such as phenylnaphthalene, naphthalene and fluoranthene could be formed by a distyryl type of intermediate. Phenanthrene and stilbene formation could have a common intermediate.

Experimental Section

Apparatus.—A Varian-Aerograph Model 200 gas chromatograph[35] equipped with a dual thermal conductivity detector and dual stainless steel columns (5 ft × 0.25 in. o.d.) packed with 20% SE-30 on 60/80 Chromosorb W was used for product analysis. During analysis, the column temperture was programmed at 6°/min from 70 to 250° and then maintained at the upper limit for 1 hr to ensure complete elution of high-boiling materials. Detector and injector temperatures were maintained at 260°; helium flow was set at 60 ml/min.

A Lindberg Hevi-Duty Furnace maintained the pyrolysis temperature. A Chromel–Alumel thermocouple was used to measure the inside temperature of the Vycor pyrolysis tube (2.5 cm diameter × 35 cm length). Nitrogen flow rate through the pyrolysis tube was maintained at 60 ml/min.

A Perkin-Elmer DSC-1 differential scanning calorimeter was used to study the thermal behavior of the compounds in the range 100–500°.

Compounds.—Sodium cinnamate, *trans*-stilbene, distyryl and polynuclear aromatic hydrocarbons used for comparative purposes were obtained, usually in 99% or greater purity, from K & K Laboratories. *trans*-Cinnamic acid and monomer

styrene (uninhibited) were obtained from Eastman Kodak Co. and *cis*-stilbene from the Aldrich Chemical Co. Toluene was Baker Analyzed Reagent grade. In all cases, purity was confirmed by glpc analysis.

Pyrolysis Procedure.—Solid samples (1-g quantities) were pyrolyzed in ceramic boats; liquid samples were injected directly onto the hot surface of the pyrolysis tube which was packed with quartz chips for each pyrolysis. Volatile products were collected in three traps cooled in Dry Ice–acetone and one gas scrubber filled with ether. Alkali (0.5% aqueous NaOH) was used as an additional scrubber when acidic products were expected (*e.g.*, pyrolysis of cinnamic acid, sodium cinnamate).

Maximum contact time varied from 1 to 2 sec generally and was taken to be the interval between sample introduction into the preheated pyrolysis tube and completion of the pyrolysis as indicated by cessation of gas evolution.

Traps were washed with ether, and when necessary with 0.5% aqueous NaOH. Successive adjustments of the aqueous alkaline extract first to pH 6.5 and then to pH 1.5 with 25% sulfuric acid liberated possible phenolic and acidic products, respectively, which were in turn removed with ether. The three ether solutions, neutrals, phenols and acids, were each concentrated by rotary evaporation and examined by glpc.

No phenols were found in any of the products. Acids were gas chromatographed as their trimethylsilyl esters.[36] All identifications were made by comparing the ultraviolet and infrared absorption spectra of collected peak effluents with those of known compounds, and confirmed by co-injection studies. Phenylnaphthalene identification was further confirmed by mass spectral analysis. Relative concentrations were determined by internal normalization.[37] Individual peak areas were measured by triangulation.[37]

(36) T. C. Jones and I. Schmeltz, *Tobacco Sci.*, **12**, 10 (1968).

Registry No.—*trans*-Cinnamic acid, 140-10-3; sodium *trans*-cinnamate, 18509-03-0; styrene, 100-42-5; distyryl, 886-65-7; *cis*-stilbene, 645-49-8; *trans*-stilbene, 103-30-0.

Acknowledgment.—We thanks Messrs. C. J. Dooley and J. W. Hampson for assistance with the mass spectral and differential scanning calorimetry measurements, respectively. We also wish to thank Drs. A. R. Day and L. J. Steffa for their comments and advice in preliminary reviews.