Bovine Immunoglobulins: A Review

JOHN E. BUTLER
Dairy Products Laboratory
Eastern Utilization Research and Development Division
Agricultural Research Service, U. S. Department of Agriculture
Washington, D. C. 20250

Abstract

Three classes of immunoglobulins have been identified in the cow: IgG, IgA, and IgM. The IgG immunoglobulins can be divided into two subclasses, IgG1 and IgG2. IgG1 is selectively transported by the udder from the circulation to the lacteal secretions by a mechanism yet to be elucidated. Hence, IgG1 is the principal immunoglobulin for passive immunization of the calf. IgG1 also fixes complement and sensitizes bovine skin. IgG2 appears more homogeneous than IgG1 and occurs in high concentrations in bovine serum. Bovine IgM occurs in serum, colostrum, and milk. IgM is important in the primary immune response, complement fixation, and as an agglutinating antibody of the serum. IgM seems to be especially associated with parasitic infections of *Anaplasma*. Bovine IgA occurs as "secretory IgA" in milk and colostrum. Whether secretory IgA, or any other immunoglobulin, is synthesized locally is unknown. Also unknown is the precise role that each immunoglobulin plays in bovine pathology.

Transfer of immunity to the offspring is by way of the milk and colostrum, and there is sufficient evidence that colostrum is necessary for immunity to disease. Although IgG1 is selectively concentrated by the bovine mammary tissue, no selectivity has been demonstrated for the highly permeable calf's gut. The reason for the failure of some calves to absorb colostral immunoglobulins is unknown.

Additional research endeavors into the distribution, genetics, function, and synthesis of the bovine immunoglobulins are most needed.

Introduction

The structure, function, and occurrence of immunoglobulins in cattle are consistent with the general pattern that has been described for such molecules in more extensively studied species such as the rabbit, human, guinea pig, and mouse. Investigations of these species have revealed species-specific variations from the general pattern, which can often be related to peculiar physiological or genetic traits. At least one such variation has long been recognized in the cow. This concerns the selective accumulation of bovine IgG1 in the colostrum and normal milk. Continued research into the structure and function of bovine immunoglobulins will eventually provide information on the chemical basis of class homologies and the significance of peculiar bovine features. This review attempts to correlate the results of old and new investigations of the bovine immune system and to express them in the current language of immunoglobulin research. Although the pattern of immunoglobulins of other species has been reviewed extensively elsewhere (29, 87), a general description of immunoglobulin structure and nomenclature is presented.

Characteristics of Immunoglobulins

The term immunoglobulins is general and applies to a family of high molecular weight proteins that share common physico-chemical characteristics and antigenic determinants. These proteins occur in the serum and other body fluids of animals and possess γ- or slow β-electrophoretic mobility. These proteins include all molecules with antibody activity, as well as other chemically related normal or pathological proteins. Although certain types of antibody activity are associated with particular classes of immunoglobulins, their classification is not based on the specificity of the antibody but on the antigenic and physico-chemical characteristics of these proteins. The family of immunoglobulin molecules has a related structure. All immunoglobulins appear to be either monomers or polymers of a four-chain molecule consisting of two light polypeptide chains (L-chains: 20,000 mole wt) and two heavy polypeptide chains (H-chains) with molecular weights varying from 50,000 to 70,000 for the different immunoglobulin classes. Figure 1 shows a linear model of a human IgG immunoglobulin.

Immunoglobulin structure is normally studied by reduction and alkylation of intact molecules to yield their constituent polypeptide chains. In addition, immunoglobulins can be fragmented by proteolytic enzymes or cyanogen bromide. Digestion of rabbit or human

IgG globulin with papain yields two Fab fragments and a single Fc fragment (Fig. 1). The Fab fragment contains the NH_2-terminal half of one of the heavy chains plus one of the entire disulfide-bonded light chains, which contains 214 to 221 residues. Reduction of an Fab fragment with sulfhydryl reagents liberates a light chain plus the 210 amino acid sequence of the heavy chain called the Fd fragment. The Fc fragment contains the COOH-terminal 240 to 250 amino acids of the heavy chain. The Fc fragment also contains most of the carbohydrate.

The COOH-terminal half of both the Fd fragment and the light chains are highly constant in their amino acid sequence, whereas the NH_2-terminal half of each of these chains is considerably more variable (Fig. 1). Together, the NH_2-terminal portions of these two chains contain the antibody-combining site. This site is that portion of the molecule which can combine specifically with some chemical configuration of the antigen which is called the antigenic determinant. Each IgG globulin molecule has two identical antibody combining sites: one in the NH_2-terminal end of each heavy-light chain pair (Fig. 1). The variability of the NH_2-terminal end of both heavy and light chains is presumably related to the multitude of antibody specificities that one individual may possess. The Fc portion of the IgG immunoglobulin molecule cannot combine specifically with antigen but is responsible for such properties as complement fixation, fixation to skin, placental transfer, and it carries species-specific and class-specific antigenic determinants.

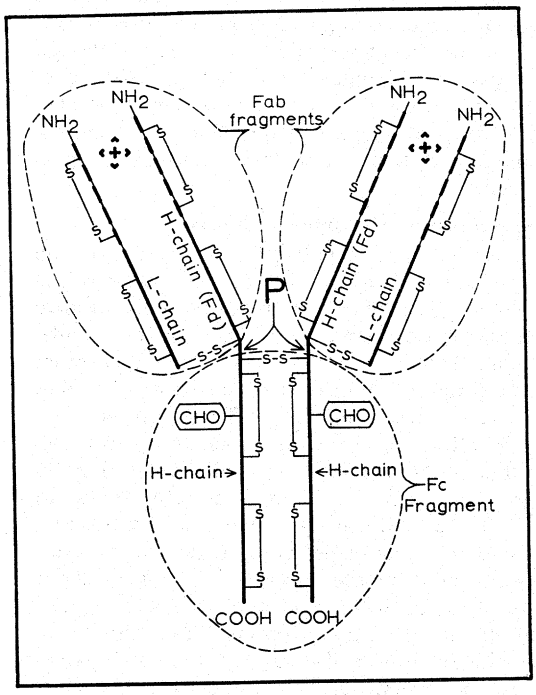

Fig. 1. Linear model of human γG immunoglobulin. Typical four-chain monomer shown with heavy (H-) and (L-) light polypeptide chains labeled and their intra-chain disulfide loops and inter-chain disulfide bridges indicated. P is site of papain cleavage, and Fab and Fc are the fragments resulting from this cleavage. Fd piece and L-chain are produced by reduction of the Fab fragment. CHO is location of carbohydrate moiety on Fc fragment. ⇔ = antibody-combining sites located in "variable (dotted line) portions" of the NH_2 terminal ends of the H- and L-chains of the Fab fragments. The solid lines indicate "invariant portion" of L- and H-chains, respectively. Because this molecule belongs to the class IgG, its H-chains would be called γ-chains. Figure modified from Edelman (34) and Cohen and Milstein (29).

The individual immunoglobulin molecule or monomer unit possesses either two kappa (κ) or two lambda (λ) light polypeptide chains. The distribution of these two chains among immunoglobulins varies with the species and in certain immunological phenomena. The κ/λ chain ratio is high among rodents, rabbits, and man, low among artiodactyls (cow, sheep) and carnivores, and horses possess only λ-chains (58). In addition, the human immunoglobulins responsible for "cold agglutination" are almost exclusively of the κ-light chain type (106).

Immunoglobulins were historically, and are currently, separated into classes on the basis of their antigenic determinants. Modern investigations have shown that specific physicochemical features of the molecules of each class are responsible for these antigenic differences. In the human, for example, five antigenically distinct classes of immunoglobulins have been recognized to date and referred to as IgG(γG), IgA(γA), IgM(γM), IgD(γD), and IgE(γE). Although both Arabic and Greek letter designations are in accord with the World Health Organization nomenclature report (18), the Arabic will be used throughout this review. Heterologous antisera (antisera raised in a different species from the source of the immunogen) produced against a mixture of molecules representing all five classes will contain antibodies specific for each class. These specific antibodies are directed primarily toward antigenic determinants located on the heavy polypeptide chains. Although the immunogenicity of the L-chains is low when a part of the intact molecule, their role in the preparation of class specific antisera cannot be ignored. In addition to the fact that certain experimental animals may produce disproportionately large amounts

of anti-L-chain antibodies (4), immunoglobulins of different classes may share antigenic similarities which arise from the association of light and heavy chains (68, 108). Nevertheless, the distinct antigenic nature of each human class can be demonstrated by immunoelectrophoresis, using the heterologous antisera described. A mixture containing the five classes is electrophoresed in agar, troughs are cut in the agar parallel to the direction of current flow, the troughs are filled with the heterologous antisera, and the precipitin reaction allowed to develop. A pattern like the one in Figure 2B will develop in which each class of immunoglobulin can be identified as a distinct precipitin arc. The class-specific heavy chains of the different human classes are called γ for IgG, α for IgA, μ for IgM, δ for IgD, and ϵ for IgE.

In addition to class differences among immunoglobulins, smaller antigenic and physicochemical differences in the heavy polypeptide chains within a class give rise to subclasses. Such differences are well recognized among the IgG immunoglobulins. In the human, four subclasses of IgG are recognized: IgG1, IgG2,

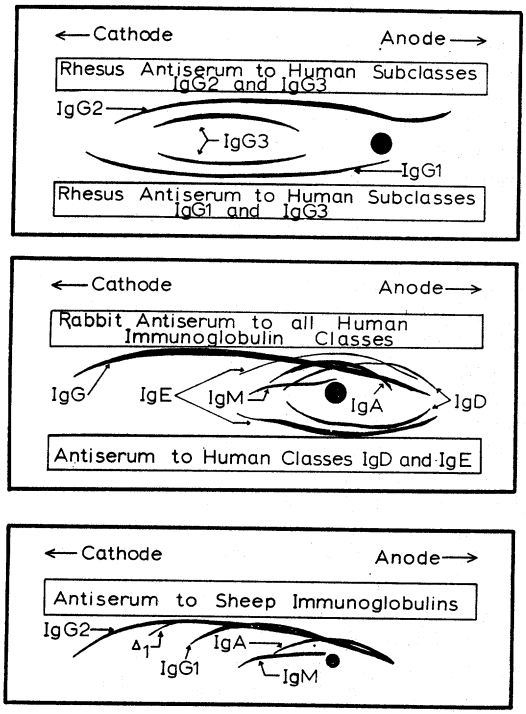

Fig. 2A. (Top) Diagram of immunoelectrophoretic test which demonstrates three of the four human IgG subclasses. Modified from Weir (126).

Fig. 2B. (Middle) Diagrammatic sketch of the immunoelectrophoretic pattern of the five classes of human immunoglobulins. The well contains a mixture of all the human immunoglobulins. The upper trough contains rabbit antisera prepared against the mixture in the well. The bottom trough contains antisera produced against only IgD and IgE. Each class of immunoglobulins forms a distinct precipitin arc when tested in this manner. The sketch shown is a composite of those available in the literature (12, 126). The concentrations of IgE and IgD in normal human serum are so low that their respective precipitin arcs may not be visible when tested by the polyvalent antisera in the upper trough. Hence, the bottom trough is used to demonstrate their presence in this diagram.

Fig. 2C. (Bottom) Diagram of immunoelectrophoretic pattern of sheep immunoglobulins (88). This diagram shows the three classes of immunoglobulins identified in the sheep. The two major subclasses of ovine IgG are illustrated, as well as a third possible subclass labeled Δ_1.

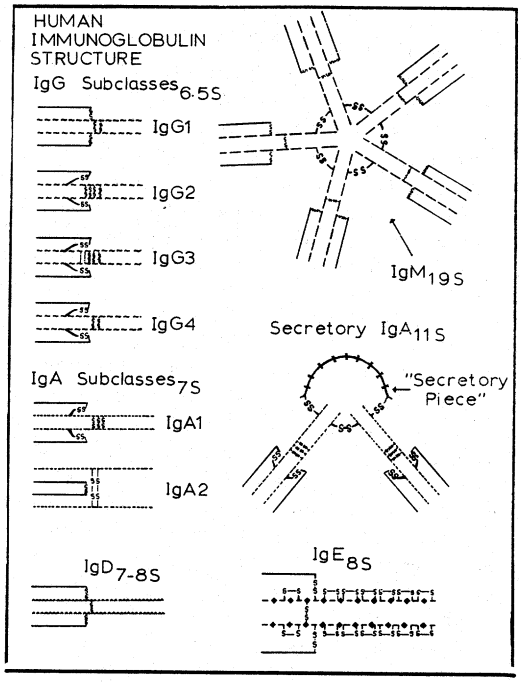

Fig. 3. Diagrammatic models of the classes and subclasses of human immunoglobulins. The four subclasses of IgG, two subclasses of IgA, secretory IgA, IgD, IgE, and IgM are illustrated. The interchain disulfide bridges are shown for all models and, in addition, the intra-heavy chain disulfide loops of IgE are shown. Note the differences in disulfide bridges among the IgG subclasses, the lack of disulfide linkage between light and heavy chains in IgA2, and the additional intra-heavy chain disulfide loops of IgE. Dotted lines between γ-chains represent possible inter-chain disulfide bridges. Chain designations are as follows: ——— = light chain (κ or λ); ~~~, γ-chain; — — —, μ-chain; ˇˇˇ, δ-chain; - - -, α-chain; —◆—◆, ϵ-chain. The approximate sedimentation constant is given for each. Figure modified from Weir (126), with information on IgG subclasses from Frangione et al. (40), IgA from Abel (3), IgD from Spiegelberg et al. (117), and IgE from Bennich and Johansson (12).

IgG3, and IgG4 (Fig. 2A). Two subclasses of IgG are recognized in the guinea pig, sheep, goat, ox, and rabbit (Fig. 2C); three are recognized in the mouse, horse, and rat.

The physico-chemical and antigenic differences among the heavy chains of the various classes and subclasses of immunoglobulins are the result of structural differences among these molecules. For example, one principal structural difference among the human IgG subclasses resides in the position and number of inter- and intra-chain disulfide bonds (Fig. 3). On the other hand, IgM resembles a polymer, being composed of five, four-chain subunits which are linked by inter-subunit disulfide bonds found on the Fc portion of their μ-heavy chains (Fig. 3). Such a configuration provides IgM with ten, rather than two, potential antibody-combining sites. Although IgA is notoriously polymeric, the structure of the monomer resembles that of IgG. Exceptions occur in at least one subclass of mouse and human IgA, in which the light chains are held only by hydrophobic bonds to the heavy-chain dimer (Fig. 3). The IgA of the exocrine secretions tends to be a dimer of the four-chain IgA unit plus a glycoprotein called the "secretory" or "transport" piece (Fig. 3). The secretory piece is a 50,000 molecular unit which may act to stabilize exocrine IgA or may possibly facilitate its interstitial transport. Structural studies of IgD and IgE are still fragmentary, but available evidence indicates that both have somewhat larger H-chains than IgG or IgM and that the H-chains are held together by a single disulfide bond. Differences in the amount and composition of carbohydrate are also found among classes. That of IgG is relatively low (2 to 3% carbohydrate) whereas IgA contains 7 to 10% and IgM, IgD, and IgE all contain 10 to 12%.

One of the most outstanding features of immunoglobulins is an extreme degree of heterogeneity far exceeding the heterogeneity of other well-known proteins such as serum albumin, β-lactoglobulin, and most enzymes. This heterogeneity may be realized by the division of the immunoglobulins into isotypes, allotypes, and idiotypes on the basis of their antigenic determinants. Isotypic determinants are the result of different structural genes and form the basis for the differentiation between the immunoglobulin classes IgG, IgM, IgA, IgD, and IgE. Allelic variances of the structural genes for a given class, subclass, or type of immunoglobulin polypeptide chain are expressed in the allotypic determinants (89); e.g., Gm allotypes of human gamma chains and Inv allotypes of human kappa and lambda chains. Idiotypic determinants reside in the Fab fragment and are uniquely characteristic for the individual (63), as inferred by the naming of them.

The extensive heterogeneity of the immunoglobulins of normal individuals has posed a tedious problem for the structural studies of these molecules. The problem has been simplified to some extent by the use of highly purified antibodies against small and well-defined haptenic determinants, but paraproteins by far constitute the most profitable source for structural studies. Paraproteins are extremely homogeneous immunoglobulins produced in patients with multiple myeloma and Waldenström macroglobulinemia, and are considered to be products of monoclonal lymphoid cells.

Many of the questions concerning immunoglobulin synthesis are still unanswered. The nature of the adaptive response in the production of specific antibodies and its correlation with the organism's genetic potential is one of the biggest problems. Hence, most of the modern research efforts in immunology are directed toward answering this question. Likewise, questions about the evolutionary origin of this adaptive system for protein synthesis are under study. Studies of homologies among the various chains or portions of chains in immunoglobulin molecules within or between species are still fragmentary, but such studies (56) have led to the conclusion that the light and heavy chains of the molecule were derived from a common ancestral gene that determined the sequence of a protein containing about 110 residues; i.e., one half the length of a κ- or λ-light chain or equaling the variable portion of such a chain. This ancestral gene, by means of a contiguous duplication, gave rise to a primitive light-chain gene which determined a sequence of 214 to 221 residues. By means of a separate contiguous duplication, the light-chain gene gave rise to a primitive heavy-chain gene which determined a sequence of 440 to 450 residues.

The antigenic and physico-chemical differences among classes and subclasses of immunoglobulins are also correlated with differences in the biological activity of these molecules. For example, IgM is usually a much more effective antibody than IgG in agglutination, phage neutralization, complement fixation, and hemolysis. Much of the efficiency of IgM can be explained merely on the basis of size and number of antibody-combining sites. Mild reduction of IgM with 2-mercaptoethanol dissociates this molecule to subunits and diminishes its bio-

logical activity. When IgG is treated with 2-mercaptoethanol, antibody activity is not affected. IgM also seems to be the first class of antibody synthesized during the primary antibody response. However, recent studies (41, 65, 125) shed some doubt on the universality of this characteristic.

Differences in the biological activity of subclasses is best illustrated by the guinea pig. Guinea pig γ_2 (IgG2) antibodies fix complement and also fix to the skin of a heterologous species (heterocytotropic antibody), whereas guinea pig γ_1 (IgG1) antibodies do not fix complement and fix only to the skin of the homologous species (homocytotropic). These differences reside in the Fc portion of the respective molecules. Like the guinea pig, differences in complement fixation and skin fixation are found among the subclasses of human IgG. Similar differences are also reported among the IgG subclasses of the mouse and rat.

Differences in the occurrence of immunoglobulins within the different body fluids of a species are also associated with different classes. In the human, IgG is the principal immunoglobulin of the serum, while IgA is a minor component. In the exocrine secretions of man, IgA is the principal immunoglobulin. This secretory IgA is usually associated with a secretory piece (see page 1898).

As a group, immunoglobulins are quite stable in aqueous buffers. All polymerize, although some do so with much greater facility than others. The intact molecules are stable to heating to 60 C for short periods of time, although the antibody activity of certain memmers is diminished or destroyed by heat. The fragments and heavy chains are less stable in aqueous buffers but can be stabilized by succinylation or polyalanylation of the intact molecule before digestion or reduction.

The principal methods for isolation of the immunoglobulins involve $(NH_4)_2SO_4$ precipitation, ion exchange chromatography, gel filtration, and preparative electrophoresis. A typical procedure involves the chromatography of a 33% saturated $(NH_4)_2SO_4$ insoluble fraction of serum or secretions. The most basic and immunoelectrophoretically slow IgG immunoglobulins are eluted in the breakthrough peak from DEAE-anion exchangers. The faster IgG immunoglobulins are eluted in the second major peak, whereas the other classes are eluted at somewhat higher ionic strengths or lowered pH, or both. Sephadex G-200 is effective in additionally separating IgM, IgA, and IgE from the more abundant IgG molecules. The intact molecules or their chains and fragments can then be studied by immunoelectrophoresis, immunodiffusion, acrylamide and starch-gel electrophoresis, and amino acid analyses. The physico-chemical parameters of immunoglobulins can be studied by the standard methods of protein chemistry.

Bovine Immunoglobulins

Three antigenically distinct classes of bovine immunoglobulins have been described. All occur in serum and in the lacteal secretions and are designated IgM, IgA, and IgG. The IgG class is divided into two subclasses, IgG1 and IgG2. The nomenclature is the same as that used for apparently homologous immunoglobulins in other species and its use here is tentative. It is the author's hope that a standard nomenclature soon will be adopted for the bovine system.

Included in this review are discussions of the three classes of bovine immunoglobulins, the occurrence of immunoglobulins in the lacteal secretions, and passive immunization of the calf by way of the colostrum. In addition, the direction of future research and the major problems requiring attention are discussed. A diagrammatic immunoelectrophoretic pattern for the bovine immunoglobulins (Fig. 4) and a table summarizing their characteristics (Table 1) accompany the text.

Bovine IgM. An antigenically distinct macroglobulin, comprising less than 10% of the serum and colostral immunoglobulins (66), and possessing physico-chemical (20, 35, 45,

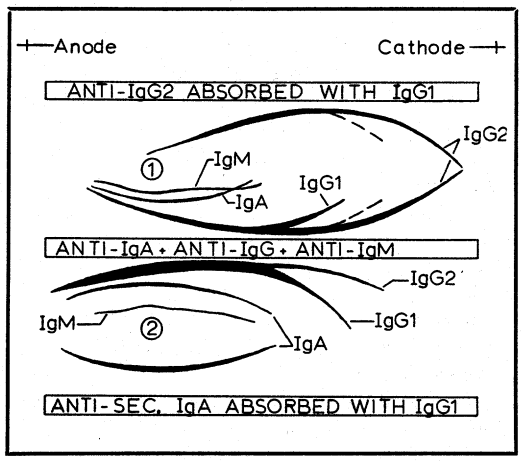

FIG. 4. Diagram of generalized immunoelectrophoretic pattern of bovine serum and lacteal immunoglobulins (22). Well 1 contains normal bovine serum, Well 2 contains colostral or normal whey. Antisera in troughs are labeled. Sec. IgA is secretory IgA. Dotted arc indicates position of Kickhöfen's γ1 and Groves' colostral IgG2.

61, 67, 76, 80, 82, 83) and biological (45, 61, 69, 80, 82, 83, 99, 100) properties similar to the IgM of other species, has been isolated (Table 1). Moreover, immunoelectrophoretic precipitin arcs characteristic for an IgM immunoglobulin have been demonstrated (Fig. 4) (10, 48, 49, 51, 96, 98). The protein is eluted in the first peak (void volume) from Sephadex G-200 (20, 35, 45, 67, 80) or in the third major peak from a continuous gradient DEAE-cellulose or DEAE-Sephadex fractionation, when the precipitate of a 33% saturated $(NH_4)_2SO_4$ preparation of serum, milk, or colostrum is used as the starting material (20, 83). IgM is found in the fraction eluted at 0.1 M salt, pH 8.2, during stepwise elution from DEAE-cellulose (46, 80). IgM has been separated from IgG by sucrose density gradient ultracentrifugation (45, 61, 99, 100), and from IgA and IgG by acrylamide gel electrophoresis (45, 61). Contaminating α-2 macroglobulin can be removed from IgM preparations by Pevikon block electrophoresis (67, 80). The macroglobulin isolated by the procedures described has a sedimentation coefficient of 19S (20, 45, 46, 61, 67, 76, 80, 82). When analyzed by disc electrophoresis, using 7.5% acrylamide at pH 4.3, IgM fails to enter the separating gel but forms a dense band at the separating gel/stacking gel interface (20, 46). Gough (45) has reported this immunoglobulin to contain 12.3% carbohydrate. Bovine IgM is easily reduced by 2-mercaptoethanol (20, 82, 83, 99, 100), which also abolishes its antibody activity (35, 45, 99, 100). When tested by immunoelectrophoresis, this protein forms a distinct precipitin arc typical[1] for an IgM immunoglobulin (20, 35, 41, 61, 76, 80, 82, 83) and apparently identical with the arc labeled IgM by investigators who did not isolate the molecule (Fig. 4). The antigenic distinctiveness of bovine IgM, demonstrated by immunodiffusion (20, 45) appears to reside in the Fc fragment which shares no antigenic determinants with bovine IgG (93). Although similar to the IgM of other species, bovine IgM may be more electrophoretically heterogeneous (80). When compared electrophoretically with ten common species, the bovine μ-chains were most similar to those of ovine IgM (76). An IgM allotype has been reported (97), but its validity has been questioned (14).

[1] The precipitin arc produced by IgM and anti-IgM on immunoelectrophoresis is typical because of its: a) relative position (Fig. 2B, 2C, 4) close to the sample well and b) slow rate of formation as a result of the slow diffusion rate of IgM.

TABLE 1. Bovine immunoglobulins.

Classes and subclasses	IgG class		IgM	IgA[a]
	IgG1	IgG2		
Electrophoretic mobility[b]	Fast γ and β_2	γ	β_2	β_2
S_{20w}[c]	6.3	6.6	19	10 to 12
Carbohydrate (%)	2 to 4	2 to 4	12	8 to 9
Molecular weight	163,000	150,000	900,000	
Biological activities				
Antibody	+	+	+	+
Allotype A1	+[d]			
Allotype A2	+[d]			
Half-life (days)	9.6	17.7		
Conc, mg/ml serum	26.4[d]		2.6	
Conc, mg/ml colostrum	43.3[d]		3.2	
Placental transmission	—	—	—	—
Lacteal transmission	Pronounced	Slight		
Skin fixation	+	?		
Complement fixation	+	?	?	

+, Activity present. —, Activity absent. ?, Questionable.

Blank spaces are criteria that have not been tested.

[a] Based on the combined characteristics of similar molecules isolated by different investigators all of which are probably IgA.

[b] Determined at alkaline pH.

[c] Average of values reported in literature.

[d] IgG class generally; no differentiation made between IgG1 and IgG2.

The primary immune response of the cow, when assayed for complement-fixing antibody to *Brucella* (99, 100), is found almost exclusively in the IgM class. Although a shift to IgG (presumably IgG1) occurs, IgM remains the most effective agglutinating (100) and complement-fixing antibody (67, 83), although the latter is not supported by all studies (5). Even when specific IgG predominates, high titers of IgM serum agglutinins in brucellosis (60, 99, 100) and during the peak parasitemia of anaplasmosis (67, 83) have been reported. An early transient IgM response was also observed in calves experimentally inoculated with Murray Valley encephalitis virus (103). Nonspecific IgM may be responsible for false positive *Brucella* tests (127). Splenectomy appears to impair or delay the IgM response in anaplasmosis more than the IgG response (67).

Although evidence that the light chains of IgM are identical to those of IgG is still lacking, the structural and functional data available suggest that the protein described here as bovine IgM is probably homologous to the IgM of other species. This is in agreement with the results of complement fixation studies in which bovine μ-chains cross-react with antihuman μ-chains to the extent of 30% (76).

Bovine IgG (IgG1 and IgG2). The most abundant and most extensively studied immunoglobulins in the cow belong to the class IgG. Although quantitative data are limited, at least 85 to 90% of the serum and whey immunoglobulins are of this class (66). The over-all physico-chemical characteristics of the class are consistent with those of the IgG class in other species, although certain biological properties appear unique. The homology of bovine IgG to the IgG of other species is supported by the finding that human gamma chains share antigenic determinants with bovine, caprine, and ovine gamma chains (1). Unlike human IgG, bovine IgG resembles that of the sheep and the Carnivora, and approaches that of the horse in its κ/λ chain ratio (58). Like their homologs in other animals, the IgG immunoglobulins are enormously heterogeneous. Unfortunately, no bovine myelomas have been reported to ease the problem of their study.

Bovine IgG has been isolated from serum, milk, and colostrum. Molecules of this class have a sedimentation coefficient of approximately 7S and contain 2 to 4% carbohydrate (45, 47, 64, 86, 113). The hexose content of bovine, caprine, and ovine IgG from serum and colostrum does not differ significantly from that of human IgG (1). The class can be subdivided into two subclasses by anion-exchange chromatography, immunoelectrophoresis, immunodiffusion, electrophoresis, and ethanol-fractionation (20, 47, 55, 64, 66, 81, 82, 111) (Fig. 4, Table 1).

The more basic IgG molecules are called the IgG2 immunoglobulins and have a mean S_{20w} value of 6.6.[2] These molecules move most rapidly to the cathode during agar electrophoresis at pH 8.2 and acrylamide gel electrophoresis at pH 4.3. The IgG2 immunoglobulins are not retained on DEAE-cellulose in 0.01 M phosphate buffer at pH 8.3 and are eluted in the breakthrough peak (Peak 1). The IgG2 immunoglobulins are plentiful in serums but occur in low concentrations in milk, colostrum, and saliva. In the serum from cattle of the Red Danish Milk Breed, IgG2 was absent in approximately three per cent of the cases, whereas about 14% of the animals had subnormal levels of IgG2 (73, 84).

The subclass IgG1 consists of the less basic IgG immunoglobulins which often appear more heterogeneous than IgG2 by immunoelectrophoresis and ion-exchange chromatography (20). Although slightly lower S_{20w} values have been reported for this subclass (mean = 6.3S)[2], considerable deviations from this value are reported in the literature. The second major peak from a continuous gradient DEAE-cellulose, and the second or third (64) peak from a similar DEAE-Sephadex fractionation of bovine immunoglobulins, is composed primarily of IgG1 molecules. Although there is normally no significant difference between the serum concentrations of IgG1 and IgG2 (84), IgG1 is the principal immunoglobulin of the lacteal (64, 77, 81, 94, 98, 111, 114) and salivary (121) secretions.

The two subclasses differ antigenically (20, 64, 94) and in amino acid composition (47, 64, 78). The IgG1 molecules have a lower basic amino acid content (47) and higher half-cystine content than IgG2 (64). The subclasses appear to have similar Fab fragments (82), but differ antigenically in their Fc fragments (64, 109). Although IgG1 and IgG2 do share some antigenic determinants on their Fc fragments, neither share antigenic determinants with the Fc fragment of bovine IgM (93). The antigenic (37), electrophoretic (37, 64), and amino acid composition and sequence (78) differences between isolated γ-chains of IgG1 and IgG2 may reside in their Fc fragments.

In a recent paper by Kickhöfen et al. (64), the IgG immunoglobulins were subdivided into three subgroups on the basis of their behavior

---

[2] Mean S_{20w} values were obtained by a numerical average of all values available in the literature.

on DEAE-Sephadex and immunoelectrophoresis. These investigators refer to IgG1 as γGs (secretory γG), IgG2 as γ2, and an intermediate IgG2-like subgroup as γ1. The γ1 and γ2 subgroups differ in charge but could not be distinguished immunologically, by half-cystine content, or by molecular weight. Employing sedimentation equilibrium analyses and electrophoresis of heavy chains in dodecyl sulfate–polyacrylamide gel, these workers reported a molecular weight of 163,000 for γGs (IgG1) and 150,000 for γ1 and γ2 (IgG2). Originally, Pierce and Feinstein (94) reported three IgG subgroups but have more recently classified their intermediate component as IgG1 (78). Groves and Gordon (47) have isolated an IgG immunoglobulin from colostrum which resembles the γ1 of Kickhöfen. Recent studies (20) suggest that it, like Kickhöfen's γ1, should be considered an IgG2 immunoglobulin (Fig. 4). A similar "intermediary speed" IgG globulin was occasionally observed in the DEAE-Sephadex chromatograms of ovine serum (2). Recent studies in the sheep, another member of the *Bovidae,* have demonstrated the presence of a third IgG subclass (Fig. 2C) (30, 52, 88) which may be the equivalent to the component observed by Aalund et al. (2). Hence, the division of the bovine IgG immunoglobulins into only two subclasses may be an oversimplification.

In the author's opinion, the division of IgG into subclasses must be made on the basis of antigenic differences known to reside in their heavy chains. Such a criterion is the only one consistent with the approach used in the study of immunoglobulins in other species. Although IgG2 molecules are on the whole more basic than IgG1 molecules and, hence, appear in the breakthrough peak during anion-exchange fractionation, both subclasses are electrophoretically heterogeneous and, as has been shown for other species (36), show overlap in their physicochemical properties. For example, one cannot always be certain that all the immunoglobulins appearing in the breakthrough peak from DEAE-Sephadex are IgG2, until they are identified antigenically. Likewise, in the rat (16), both IgGa and IgGb have overlapping electrophoretic mobilities and anion-exchange behavior. Hence, although differences in average charge are useful criteria for the initial isolation of the bovine subclasses, such a purely physico-chemical parameter alone is not adequate for their identification. The IgG immunoglobulins are best thought of as an electrophoretic continuum, with degrees of differences in biological properties and antigenic determinants. Although the division of such heterogeneous proteins into classes, subclasses, or other subpopulations serve to simplify the study of such molecules, one must exercise caution in dividing such a continuum into discrete units.

Within the IgG class, complement fixation and homologous skin sensitization are principally properties of the IgG1 immunoglobulins (78, 83, 92, 98). In anaplasmosis, a progression of agglutinating antibody from IgM to IgG1 occurs and the latter can be detected as long as 18 months post-infection (83). While early studies indicated a half-life of 21 days for bovine IgG2 (32), more recent experiments with normal, female cattle above two years of age demonstrated the plasma disappearance half-life for IgG1 and IgG2 to be, respectively, 9.6 (±1.2) and 17.7 (±0.8) days (84). Similar results were obtained in goats (1). Although the physico-chemical and immunoelectrophoretic behavior of IgG1 and IgG2 suggests homology to the γ1- (IgG1) and γ2- (IgG2) immunoglobulins of other species, the reversal of the complement-fixing activity between IgG1 and IgG2 is inconsistent with what is generally true for other species (29, 126). Recent studies, however, have shown that at least guinea pig γ1 is also capable of some complement fixation (102). In addition, because complement fixation (a cytotoxic activity) and homologous skin sensitivity (homocytotropism) are not properties shared by any one class of immunoglobulins, a) the cow is either an unusual species, or b) the IgG1 subclass is masking a yet-undiscovered class of bovine immunoglobulin.

The two subclasses of IgG can be correlated with the early preparations of Emil Smith (111) in the following manner: Although antigenically heterogeneous, Smith's pseudoglobulin and plasma T-globulin contain mostly IgG1. The pseudoglobulin[3] fraction also contains "secretory IgA" (see later). Smith's serum γ-globulin contains both IgG2 and IgG1 and his euglobulin[3] consists of IgG2-like globulins, slower IgG1 globulins, IgA, and IgM (20).

Bovine IgA. The immunoelectrophoretic pattern of bovine milk or colostrum, and also bovine serum, often shows a precipitin arc presumed to be due to an immunoglobulin distinct from IgG and IgM (Fig. 4). Isolation, partial isolation, or immunoelectrophoretic recognition of this protein has been reported (22, 45, 61, 69, 81, 98). The conspicuously similar (but unnamed) precipitin arc shown in some studies was probably also due to this protein (48, 49, 51, 79, 98). Because of the lack of collaboration

[3] Samples kindly provided by Dr. W. G. Gordon, ARS, EURDD, Wyndmoor, Pennsylvania.

among investigators, it is possible that each has reported a distinct, but different immunoglobulin. From the data available, this possibility seems remote and the immunoglobulin in all cases is probably IgA. On the contrary, the immunoglobulin designated IgA by some (6, 10) is probably, on the basis of its abundance, IgG1.

The immunoglobulin described here as IgA is sensitive to 2-mercaptoethanol (45, 61, 82), has a carbohydrate content of 8 to 9% (45), and a sedimentation coefficient of 10 to 12S for the lacteal form (22, 45, 61). The apparent bovine IgA has been separated from IgG and IgM by Sephadex G-200 gel filtration (22, 61), by anion-exchange chromatography (45, 46, 81), and by acrylamide gel electrophoresis (45, 61), and appears more abundant in whey than in serum (22). This protein can be separated from IgG by sucrose density gradient centrifugation (45, 61) and can be obtained in an enriched form by $ZnSO_4$ precipitation (45). IgA has been shown to be antigenically distinct from IgG and IgM by immunodiffusion (22, 45), immunoelectrophoresis (22, 45, 61), and by absorption of rabbit anti-IgA serum with IgG (22). Multiple precipitin arcs have been observed with some sera (45). Investigators using early pseudoglobulin (IgG1) preparations also reported variable amounts of 10S material in their samples (47, 55, 91, 112), although this may have been due to aggregated IgG.

Agglutinating antibodies to *Brucella* (45, 61) that lose their activity following treatment with 2-mercaptoethanol, have been found in this class.

A basic glycoprotein in milk and colostrum was first reported by Groves and Gordon (47). It has been demonstrated that this 50,000 molecular weight molecule occurs both free and bound to lacteal IgA (21). Hence, glycoprotein-a and lacteal IgA are probably respectively homologous to the "secretory (transport) piece" and "secretory IgA" described for man (123), rabbit (9, 27), mouse (8), and sheep (53). That serum IgA contains no bound glycoprotein-a (22) may explain the difference between serum and colostrum detected by absorption and immunoelectrophoresis (69).

On the basis of its antigenic characteristics, carbohydrate content, gel-filtration, and sedimentation behavior, and its association with glycoprotein-a, confirmation of bovine IgA appears imminent.

Lacteal and salivary immunoglobulins. Although the bovine immunoglobulins fit the general pattern described for other species, a notable deviation does occur. The principal immunoglobulin in the lacteal, lacrimal, and salivary secretions of man (28, 50, 59, 123) and the colostrum of the rabbit (27) and mouse (8) is secretory IgA. In the cow, however, it was early demonstrated that the lacteal secretions, especially colostrum, contained high levels of immunoglobulins similar to the IgG found in the serum (48, 49, 70, 74, 98, 111, 119). These IgG molecules may be concentrated 2 to 13 times their level in the serum (14, 33, 42, 66), and may constitute 50 to 75% of the colostral protein. Nearly all these immunoglobulins belong to the subclass IgG1 (64, 77, 81, 94, 98, 111, 114) (Fig. 4). Although the concentration of immunoglobulins is reduced in normal milk, IgG1 is still the predominant type. In contrast to IgG1, little IgG2 enters the lacteal secretions (81, 94, 122) (Fig. 4). Although most chemical and immunological evidence indicates that the serum IgG1 and colostral or milk IgG1 are identical (48, 78, 79, 81, 93, 94), recent articles report minor antigenic differences (1) and a difference in half-cystine residues (64). There is strong evidence that almost all of the IgG1 immunoglobulins are selectively transported in an unaltered form by the acinar epithelium of the udder from the circulation to the lacteal secretions (13, 25, 33, 38, 42, 70, 71). Similarly, unaltered transport of IgG has been reported to occur in the rabbit and goat (7).

Although the function of the secretory piece of secretory IgA is still uncertain, there has been some suggestion that this glycoprotein is involved in a mechanism which results in high concentrations of IgA in the exocrine secretions (74, 116, 123). As no secretory piece has yet been isolated for bovine lacteal IgG1, the selective transport mechanism apparently depends on differences in the γ-chains between the IgG1 and IgG2 (78). This seems consistent with selective placental transfer in rabbits, which depends on the Fc fragment of IgG (17). The selective mechanism is further supported by the failure of milk proteins to be transferred to serum (70, 129). In addition to the selective mechanism for IgG1, the issue of whether other immunoglobulins are also more concentrated in colostrum than in normal milk and serum is still undecided. While there is evidence that other immunoglobulins are also concentrated (6, 10, 20, 33, 67, 79), an actual decrease in IgG2 transport during colostrum formation has been reported (25, 26). If it is true that all immunoglobulins are concentrated, the accumulation may be aided by the high histamine level of the colostrum (128).

Although bovine IgG1 is the principal immunoglobulin of the milk and colostrum, the concentration of bovine IgA is also higher in

colostrum and milk than in serum (22). It appears that the bulk of this lacteal IgA is in the form of secretory IgA (22). The β_2-globulin described by Kramer (69), responsible for the immunological difference he detected between serum and colostrum, may be the same as the secretory IgA described here.

In addition to IgG1 and IgA, IgM and IgG2 also occur in lacteal secretions. The IgM which occurs in lacteal secretions (45, 48, 61, 79, 81, 92, 98) is in slightly higher concentrations in colostrum than in milk and the concentration of IgM in colostrum is equal to the concentration of IgM in the serum (10, 20, 66). Very little IgG2 occurs in the lacteal secretions (81, 94, 122) and there is some evidence that lacteal IgG2 is electrophoretically faster (in agar-gel) than serum IgG2 (20, 77, 98). The possibility of a general concentration increase of immunoglobulins in colostrum has been discussed previously.

Whether all the immunoglobulins of the colostrum and milk are derived from serum is not clearly established. Campbell et al. (24) reported mammary plasmocytosis immediately before and shortly after parturition, although more recent studies fail to substantiate this report (33, 71, 75). When cattle are immunized through teat canals (90, 104), antibody first appears in the milk (104). This experiment, however, does not prove local synthesis. The "secretory piece (glycoprotein-a)" and "secretory IgA" have not been found in the serum (22) and are probably synthesized locally (e.g., mammary lymphoid and epithelial tissue) as they are in other species (8, 9, 59, 72, 74, 101, 116, 123, 124). The occurrence of electrophoretically faster IgG2 molecules, especially in the lacteal secretions (20), chemical and ion-exchange differences for serum and colostral IgG1 (64), and the reported variations in sedimentation studies of IgG1 are incompletely explained. For these reasons, some local synthesis of milk and colostral immunoglobulins is still likely.

Specific agglutinating antibody to *Brucella* has been demonstrated for IgG1, IgM, and the apparent IgA (60, 61). The results of systemic immunizations indicate that specific antibody is transported to the milk similarly to other immunoglobulins (13, 54, 71, 85, 98, 118).

Immunoglobulins have also been isolated from saliva (121). These are identical with the serum (fast) γ-globulin IgG1 (121, 122).

While exocrine IgA in man has a role in upper respiratory infections (19, 74), attempts to show complement fixing or metabolic-inhibiting antibody activity in nasal mucus of cattle infected with *Mycoplasma mycoides* have failed (31). This finding may be correlated with the greatly reduced level of exocrine IgA in the cow.

Passive immunity of offspring. Correlated with the high levels of IgG1 in colostrum and milk is the high permeability of the calf's gut during the first days after birth and the failure of immunoglobulins to be transferred from maternal serum to the fetal calf. As a result of the typical immune incompetence of a fetal mammal deprived of maternal immunoglobulins, the serum of the newborn calf contains few or no immunoglobulins (10, 48, 66, 77, 96, 111, 114). Concentrations of only 0.1 to 2.0 mg/ml have been reported for IgM and IgG, respectively (66). Despite the general immune incompetence, day-old calves can respond to human serum albumin, although two weeks are required before a response to polysaccharide antigen can be demonstrated (110).

The subject of passive immunity of the offspring in a wide range of species has been reviewed elsewhere (107, 120). It suffices to state that as a result of the syndesmochorial placenta of sheep, goats, and cattle, the necessary passive immunization of the offspring is by way of the colostrum and milk. While accumulation of immunoglobulins in colostrum and milk is a selective process, absorption by the calf's gut is not (11, 66, 92, 94, 95, 98). IgM and IgG are absorbed with equal efficiency (67) and the rapid absorption of the apparent IgA (61) has also been shown. Hence, immunoglobulins appear in the serum of a newborn calf within one to three hours after the feeding of colostrum (54, 77, 85, 96), and reach a maximum at 6 to 24 hr (66, 96, 105), at which time the serum immunoglobulin pattern of the calf is essentially identical with that of the dam's colostrum (77, 81, 96, 111, 114). These absorbed immunoglobulins are antigenically identical to those of the colostrum (77, 94, 96, 119). Although absorption of immunoglobulins is limited to the first one to two days after birth (71, 119), the absorbed immunoglobulins and the acquired immunity remain for 14 to 67 days (14, 54, 98, 118). Calf serum remains virtually free of intrinsic immunoglobulins for several weeks (62, 98), acquiring the typical bovine serum pattern at six weeks (98). An unusually high number of calves fail to absorb colostral immunoglobulins and remain virtually agammaglobulinemic until the mature serum pattern develops (62, 67). Likewise, a certain number of the immunoglobulins ingested by all individuals are enzymatically degraded (92). The mechanism underlying the failure of immunoglobulins to be absorbed is not understood. The duration of high permea-

bility of the calf's gut correlates nicely with the period of colostrum production; hence, maintenance of permeability may be related to the elevated concentration of histamine (128) or other pharmacological mediators in the colostrum (71).

It is well known that calves deprived of colostrum are especially susceptible to death by colisepticemia (71) and this can be correlated with the low level of serum immunoglobulins (43). The same was true of death by bacteriaemia to *Escherichia coli* (39). The lowered serum levels of immunoglobulins have been correlated with the spring of the year (44) and with calves that had received colostrum by bucket rather than by suckling, but uncorrelated with the level of colostral immunoglobulins (115). Loss of biological activity of the hypothesized pharmacological mediators might explain the bucket-feeding results. As mentioned previously, the problem appears to be one of absorption (62, 66). There is sufficient evidence that the specific antibodies are absorbed in the same manner as immunoglobulins (54, 61, 85, 105) and such antibodies have a protective role for the calf (23, 71, 118).

Although colostral antibodies provide passive immunity to the calf, their presence in the calf may (110) or may not (118) have a suppressive effect on the animal's own immune system. The former has been demonstrated in the pig (57).

Future Research

Current knowledge of the bovine immunoglobulins is far from complete. The three classes of immunoglobulins identified in the cow were historically the first three identified in extensively studied species. Little is known about the homocytotropic and heterocytotropic bovine immunoglobulins, and it seems reasonable that the IgG1 immunoglobulins may be masking an IgE-like molecule which is responsible for the homologous skin fixation observed. The IgG immunoglobulin complex requires additional study and the demonstration of a third IgG subclass would not be surprising. In addition to class and subclass differences among bovine immunoglobulins, the issue of genetic variation (physico-chemical or allotypic) requires attention. Recently reported (15) are two allotypes, A1 and A2. Data indicate they are both heavy chain markers controlled by autosomal genes (14). Pilot studies (46) have also shown that differences in the electrophoretic behavior of IgG1 and IgA between individuals may reflect genetic differences.

The mechanism of the selective transport of IgG1 is not known and will probably not be elucidated until precise structural studies are completed. The exact role of the secretory piece of IgA is poorly understood in all species. The relatively high concentration of this molecule in bovine milk may make it a useful prototype for functional studies. It is not yet known whether the failure of colostral immunoglobulins to be absorbed by some calves is a function of the calf's gut or the dam's colostrum; hence, this problem requires study. Similarly, the function, biosynthetic and evolutionary significance of the predominance of λ-type light chains among pooled bovine IgG provides another area for further studies. Finally, little is known about the relationship between variations or abnormalities in the bovine immune system and pathology in the cow. When compared to the human, rabbit, guinea pig, and mouse, knowledge of the bovine immune system is in its infancy.

Acknowledgments

This comprehensive review of the bovine immunoglobulins has been made possible through the generous cooperation of my colleagues and the numerous investigators who have reviewed this manuscript. The following individuals are acknowledged for their contributions, suggestions, and assistance: Dr. Ole Aalund, Department of Forensic Medicine, Royal Veterinary and Agricultural University, Copenhagen, Denmark; Dr. Peter Z. Allen, School of Medicine and Dentistry, University of Rochester, New York; Mr. Dennis Blakeslee and Dr. William H. Stone, Laboratory of Genetics, University of Wisconsin, Madison; Dr. Edward C. Franklin, New York University Medical Center; Dr. Merton L. Groves, Milk Properties Laboratory, Eastern Utilization Research and Development Division, USDA, Philadelphia, Pennsylvania; Dr. Robert Jenness, Department of Biochemistry, University of Minnesota, St. Paul; Dr. Charles A. Kiddy, Animal Husbandry Research Division, USDA, Beltsville, Maryland; Dr. Frederick A. Murphy, National Communicable Disease Center, Atlanta, Georgia; Dr. A. E. Pierce, Commonwealth Scientific and Industrial Research Organization, Melbourne, Australia; Dr. T. B. Tomasi, Department of Medicine, State University of New York at Buffalo; and Mrs. Carol S. Pierce, Doctors E. J. Coulson and Joseph R. Spies, Allergens Investigations, Dairy Products Laboratory, Eastern Utilization Research and Development Division, USDA, Washington, D.C.

References

(1) Aalund, O. 1968. Heterogeneity of Ruminant Immunoglobulins. Munksgaard, Copenhagen, Denmark.

(2) Aalund, O., J. W. Osebold, and F. A. Murphy. 1965. Isolation and characterization of ovine gamma globulins. Arch. Biochem. Biophys., 109: 142.

(3) Abel, C. A., and H. M. Grey. 1969. Structural differences between human γA1 and

γA2 myeloma proteins. Federation Proc., 28(2): 495. Abstr. no. 1324.

(4) Allen, Peter Z. 1969. Personal communication.

(5) Anderson, R. K., R. Jenness, H. P. Brumfield, and P. Gough. 1964. Brucella-agglutinating antibodies: Relation of mercaptoethanol stability to complement fixation. Science, 143: 1334.

(6) Arioli, V., T. Baglioni, and C. Fioretti. 1967. Immunoelectrophoretic study of bovine serum during hyperimmunization. Clin. Vet. (Italy), 90(1): 90.

(7) Askonas, B. A., P. N. Campbell, J. H. Humphrey, and T. S. Work. 1954. The source of antibody globulin in rabbit milk and goat colostrum. Biochem. J., 56: 597.

(8) Asofsky, R., and M. B. Hylton. 1968. Secretory IgA synthesis in germ free and conventionally reared mice. Federation Proc., 27(2): 617. Abstr. no. 2259.

(9) Asofsky, R., and P. A. Small, Jr. 1967. Colostral immunoglobulin-A: Synthesis *in vitro* of T-chain by rabbit mammary gland. Science, 158: 932.

(10) Baglioni, T., and C. Fioretti. 1967. Immunoelectrophoretic study of immune globulins of bovine colostrum and milk. Arch. Vet. Ital., 18(6): 419.

(11) Bangham, D. R., P. L. Ingram, J. H. B. Roy, K. W. G. Shillam, and R. J. Terry. 1958. The absorption of ^{131}I-labelled serum and colostral proteins from the gut of the young calf. Proc. Roy. Soc. B, 149: 184.

(12) Bennich, H., and S. G. O. Johansson. 1967. Studies on a new class of human immunoglobulins. II. Chemical and physical properties. pp. 199-205. In Gamma Globulins. Proc. Third Nobel Symposium. June 12-17, Stockholm. J. Killander, ed. Interscience, New York.

(13) Blakemore, F., and R. J. Garner. 1956. The maternal transference of antibodies in the bovine. J. Comp. Pathol., 66: 287.

(14) Blakeslee, D. 1969. Personal communications.

(15) Blakeslee, D. L., and W. H. Stone. 1969. Immunogenetics of IgG allotypes of cattle. Federation Proc., 28(2): 436. Abstr. no. 1007.

(16) Block, K., H. Morse III, and F. Austen. 1968. Biologic properties of rat antibodies. I. Antigen-binding by four classes of anti-DNP antibodies. J. Immunol., 101(4): 650.

(17) Brambell, F. W. R., W. A. Hemmings, W. A. Oakley, and R. R. Porter. 1960. The relative transmission of the fractions of papain hydrolyzed homologous γ-globulin from the uterine cavity to the foetal circulation in rabbits. Proc. Roy. Soc. B, 151: 478.

(18) Bulletin World Health Organization. 1964. Nomenclature for human immunoglobulins. 30: 447. [Also reprinted in Immunochem., 1(3): 145.]

(19) Busser, F., R. Butler, and R. M. Pan. 1968. Susceptibility to infection and IgA deficiency in the infant. J. Pediat., 72(1): 29.

(20) Butler, J. E. 1969. Unpublished data.

(21) Butler, J. E., E. J. Coulson, and M. L. Groves. 1968. Identification of glycoprotein-a as a probable fragment of bovine IgA. Federation Proc., 27(2): 617. Abstr. no. 2256.

(22) Butler, J. E., C. S. Pierce, M. L. Groves, and E. J. Coulson. 1969. Identification of bovine IgA. Unpublished results.

(23) Campbell, B., and W. E. Petersen. 1963. Immune milk—a historical survey. Dairy Sci. Abstr., 25(9): 345.

(24) Campbell, B., R. M. Porter, and W. E. Petersen. 1950. Plasmacytosis of the bovine udder during colostrum secretion and experimental cessation of milking. Nature, 166: 913.

(25) Carroll, E. J. 1961. Whey proteins of drying-off secretions, mastitic milk, and colostrum separated by ion-exchange cellulose. J. Dairy Sci., 44: 2194.

(26) Carroll, E. J., and F. A. Murphy. 1965. Changes in whey proteins between drying and colostrum formation. J. Dairy Sci., 48(9): 1246.

(27) Cebra, J. J., and P. A. Small, Jr. 1967. Polypeptide chain structure of rabbit immunoglobulins. III. Secretory γA-immunoglobulin from colostrum. Biochem., 6(2): 503.

(28) Chondirker, W. B., and T. B. Tomasi, Jr. 1963. Gamma-globulins: quantitative relationships in human serum and non-vascular fluids. Science, 142: 1080.

(29) Cohen, S., and C. P. Milstein. 1967. Structure and biological properties of immunoglobulins. Advan. Immunology, 7: 1.

(30) Curtain, C. C. 1969. A new immunoglobulin subclass in the sheep. Immunology, 16(3): 373.

(31) Davies, G. 1969. The examination of nasal mucus for antibodies to *Mycoplasma mycoides*. Vet. Record, 84(16): 417.

(32) Dixon, F. J., D. W. Talmage, P. H. Maurer, and M. Deichmiller. 1952. The half-life of homologous gamma globulin (antibody) in several species. J. Exptl. Med., 96: 313.

(33) Dixon, F. J., Wm. O. Weigle, and J. J. Vazques. 1961. Metabolism and mammary secretions of serum proteins in the cow. J. Lab. Invest., 10(2): 216.

(34) Edelman, G. M. 1967. Studies on the primary and tertiary structure of γG immunoglobulin. pp. 89-108. In Gamma Globulins. Proc. Third Nobel Symposium. June 12-17, Stockholm. J. Killander, ed. Interscience, New York.

(35) Erler, W. von and D. Schimmel. 1967. Untersuchungen an Rindersera die in der Brucellose-Langsamagglutination verdachtig

reagieren. IV. Darstellung reiner Antisera gegen die 7S-und 19S γ-Globuline des Rindes. Monatash. Veterinaermed., 22(6):212.
(36) Fahey, John L., J. Wunderlich, and R. Mishell. 1964. The immunoglobulins of mice. I. Two subclasses of mouse 7S γ_2-globulins: γ_{2a}- and -γ_{2b}-globulins. J. Exptl. Med., 120(2): 243.
(37) Feinstein, A., and A. E. Pierce. 1968. Unpublished data. [Cited from Reference 78.]
(38) Feldman, J. D. 1961. Fine structure of the udder during gestation and lactation. Lab. Invest., 10: 238.
(39) Fey, H., and A. Margadant. 1961. Hypergamma-globulinamie bie der Colisepsis des Kalbes. Pathol. Microbiol., 24: 970.
(40) Frangione, B., C. Milstein, and E. C. Franklin. 1969. Immunoglobulins: Structural studies of immunoglobulin G. Nature, 221: 145.
(41) Freeman, M. J., and A. B. Stravitsky. 1965. Radioimmunoelectrophoretic study of rabbit anti-protein antibodies during the primary response. J. Immunol., 95: 981.
(42) Garner, R. J., and W. Crawley. 1958. Further observations on the maternal transference of antibodies in the bovine. J. Comp. Pathol., 68: 112.
(43) Gay, C. C., N. Anderson, E. W. Fisher, and A. D. McEwan. 1965. Gamma globulin levels and neonatal mortality in market calves. Vet. Record, 77: 148.
(44) Gay, C. C., E. W. Fisher, and A. D. McEwan. 1965. Seasonal variation in gamma globulin levels in neonatal market calves. Vet. Record, 77: 994.
(45) Gough, P. M., R. Jenness, and R. K. Anderson. 1966. Characterization of bovine immunoglobulins. (Abstr.) J. Dairy Sci., 49: 718.
(46) Groves, M. L. 1968. Personal communication.
(47) Groves, M. L., and W. G. Gordon. 1967. Isolation of a new glycoprotein-a and a γG-globulin from individual cow milks. Biochemistry, 6(8): 2388.
(48) Gulger, E. von, M. Bein, and G. von Muralt. 1959. Über immunoelektrophoretische Untersuchungen an Kuhmilchproteins. Schweizer. Med. Wochschr., 89(45): 1172.
(49) Hanson, L. A. 1959. Immunological analysis of bovine blood serum and milk. Experientia, XV(12): 471.
(50) Hanson, L. A. 1961. Comparative immunological studies of the immune globulins of human milk and blood serum. Intern. Arch. Allergy, 18: 241.
(51) Hanson, L. A., and B. Johansson. 1959. Immune electrophoretic analysis of bovine milk and purified bovine milk protein fractions. Experientia, XV(10): 377.
(52) Heimer, R., L. C. Clark, and P. H. Maurer. 1969. Immunoglobulins of sheep. Arch. Biochem. Biophys., 131: 9.
(53) Heimer, R., and P. H. Maurer. 1969. Two subclasses of sheep immunoglobulin A. Federation Proc., 28(2): 766. Abstr. no. 2838.
(54) Hejlick, K., J. Drazan, and A. Piskac. 1963. Colostral immunity in bovine tuberculosis. Vet. Med. Praha, 8(5): 355.
(55) Hess, E. L., and H. F. Deutsch. 1948. Biophysical studies of blood plasma proteins. VIII. Separations and properties of the γ-globulins of the sera of normal cows. J. Amer. Chem. Soc., 70: 84.
(56) Hill, R. L., H. E. Lebovitz, R. E. Fellows, Jr., and R. Delaney. 1967. The evolution of immunoglobulins as reflected by the amino acid sequence studies of rabbit Fc fragments. pp. 107-127. In Gamma Globulins. Proc. Third Nobel Symposium. June 12-17, Stockholm. J. Killander, ed. Interscience, New York.
(57) Hoerlein, A. B. 1957. The influence of colostrum on antibody response in baby pigs. J. Immunol., 78(2): 112.
(58) Hood, L., W. R. Gray, B. G. Sanders, and W. J. Dreyer. 1967. Light chain evolution. Cold Spring Harbor Symposium, 32: 133.
(59) Hurlimann, J., and C. Zuber. 1968. *In vitro* protein synthesis by human salivary glands. I. Synthesis of salivary IgA and serum proteins. Immunology, 14(6): 809.
(60) Jenness, R. 1969. Personal communications.
(61) Jenness, R., R. K. Anderson, and P. M. Gough. 1965. Fractionation of bovine milk and blood agglutinins for *Brucella* by gel filtration and specific absorption techniques. Federation Proc., 24: 503.
(62) Jones, R. A. 1967. Detection of immunoglobulin (IgG) *post partum* in calves. Vet. Record, 81(19): 494.
(63) Kabat, E. A. 1968. Structural Concepts in Immunology and Immunochemistry. Holt, Rinehart and Winston, New York.
(64) Kickhöfen, B., D. K. Hammer, and D. Schell. 1968. Isolation and characterization of γG type immunoglobulins from bovine serum and colostrum. Hoppe-Seyler's Z. Physiol. Chem., 349: 1755.
(65) Kim, Y. B., S. G. Bradley, and D. W. Watson. 1967. Ontogeny of immune response. III. Characterization of X-component in germ-free, colostrum-deprived piglets. J. Immunol., 98(4): 868.
(66) Klaus, G. G. B., A. Bennett, and E. W. Jones. 1969. A quantitative study of the transfer of colostral immunoglobulins to the newborn calf. Immunology, 16: 293.
(67) Klaus, G. G. B., and E. W. Jones. 1968. The immunoglobulin response in intact and splenectomized calves infected with *Anaplasma marginale*. J. Immunol., 100(5): 991.
(68) Korngold, L., and K. Madaŭnski. 1967. Sub-groups of G-myeloma globulins of type K and type L. Immunochemistry, 4: 353.
(69) Kramer, T. 1963. Immunological identi-

fication of bovine colostral globulins. Bacteriol. Proc., p. 63.

(70) Larson, B. L., and D. C. Gillespie. 1957. Origin of the major specific proteins in milk. J. Biol. Chem., 227: 565.

(71) Lascelles, A. K. 1963. A review of the literature on some aspects of immune milk. Dairy Sci. Abstr., 25(9): 359.

(72) Lawton, A. R. 1969. Binding of "secretory piece" by fragments of rabbit colostral IgA *in vitro*. Federation Proc., 28(2): 765. Abstr. no. 2832.

(73) Mansa, B. Hypo-7S-gamma-globulinaemia in mature cattle. Acta Pathol. Microbiol. Scand., 63: 153.

(74) Martinez-Tello, F. J., D. G. Branun, and W. A. Blanc. 1968. Immunoglobulin production in bronchial mucosa and bronchial lymph nodes, particularly in cystic fibrosis of the pancreas. J. Immunol., 101(5): 989.

(75) Marx, G. D. 1965. Immunological and cytological responses of the bovidae to intramammary infusion of antigens. Dissertation Abstr., 25(10): 5470.

(76) Mehta, P. D., and T. B. Tomasi, Jr. 1969. Comparative studies of mammalian immunoglobulins. Federation Proc., 28(2): 820. Abstr. no. 3131.

(77) Micusan, V. V., and L. Buzila. 1965. Antigenic relations between maternal serum proteins, colostrum immunoglobulins, and serum proteins of newborn calves. Studii Cercetari Biochem., 7(2): 213.

(78) Milstein, C. P., and A. Feinstein. 1968. Comparative studies of two types of bovine immunoglobulin heavy chains. Biochem. J., 107:559.

(79) Muralt, de Par. G. 1962. Transmission de l'immunite humorale de la mere à son petil les bovidés. Helv. Med. Acta, 29, Suppl. 42, p. 90.

(80) Murphy, F. A., O. Aalund, and J. W. Osebold. 1964. Physical heterogeneity of bovine gamma globulins: Gamma-1M globulin electrophoretic heterogeneity. Soc. Exptl. Biol. Med., 117: 513.

(81) Murphy, F. A., O. Aalund, J. W. Osebold, and E. J. Carroll. 1964. Gamma globulins of bovine lacteal secretions. Arch. Biochem. Biophys., 108: 230.

(82) Murphy, F. A., J. W. Osebold, and O. Aalund. 1965. Physical heterogeneity of bovine γM and γG globulins. Arch. Biochem. Biophys., 112: 126.

(83) Murphy, F. A., J. W. Osebold, and O. Aalund. 1966. Kinetics of the antibody response to *Anaplasma marginale* infections. J. Infect. Diseases, 116: 99.

(84) Nansen, P. 1969. Manuscript in preparation.

(85) Nika, T., K. Sukegawa, and H. Handa. 1965. Studies of the antibody produced in milk. 3. Immunological significance of colostrum. J. Jap. Soc. Food Nutr., 18(2): 85.

(86) Nolan, C., and E. L. Smith. 1962 Glycopeptides. III. Isolation and properties of glycopeptides from a bovine globulin of colostrum and from fraction II-3 of human globulin. J. Biol. Chem., 237(2): 453.

(87) Ovary, Z. 1967. The structure of various immunoglobulins and their biologic activities. Ann. N. Y. Acad. Sci., 129(1): 776.

(88) Pan, I. C., A. M. Kaplan, R. L. Morter, and M. J. Freeman. 1968. Spectrum of ovine immunoglobulins. Proc. Soc. Exptl. Biol. Med., 129(3): 867.

(89) Pernis, B. 1967. Relationships between the heterogeneity of immunoglobulins and the differentiation of plasma cells. Cold Spring Harbor Symposia on Quant. Biol., 32: 333.

(90) Petersen, W. E., and B. Campbell. 1968. A production of antibodies in milk. U.S. 337698 (Cl. 167-178). 2 April.

(91) Phelps, R. A., and J. R. Cann. 1957. On the modification of γ-globulin by acid. Biochim. Biophys. Acta, 23: 149.

(92) Pierce, A. E. 1967. Immunization of the young animal. Passive immunization, selective transfer of immune globulins through bovine colostrum. XVIIIth World Vet. Congr. Paris, July 17-22, 1: 407.

(93) Pierce, A. E. 1969. Personal communication.

(94) Pierce, A. E., and A. Feinstein. 1965. Biophysical and immunological studies on bovine immune globulins with evidence for selective transport within the mammary gland from maternal plasma to colostrum. Immunology, 8: 106.

(95) Pierce, A. E., P. C. Risdall, and B. Shaw. 1964. The absorption of orally-administered insulin by the newly-born calf. J. Physiol., 171: 203.

(96) Popovici, D., and G. Jurencova. 1966. Immunoelectrophoretic investigation of the transfer of certain protein fractions from the colostrum into calf blood, shortly after birth. Studii Cercetari Biol. (Ser. Zool.), 18(1): 53.

(97) Rapacz, J., N. Korda, and W. H. Stone. 1968. Serum antigens of cattle. I. Immunogenetics of a macroglobulin allotype. Genetics, 58: 387.

(98) Rice, C. E., and J. Carrieré. 1969. Studies of changes in serum proteins in cows and calves in a herd affected with Johne's disease. Res. Vet. Sci., 10: 188.

(99) Rose, E., G. Lambert, and M. Roepke. 1964. Ultracentrifugation and heat-inactivation studies on seroagglutinins of pregnant heifers artificially infected with virulent *Brucella abortus*. Amer. J. Vet. Res., 25: 329.

(100) Rose, J. E., and M. H. Roepke. 1964. Physicochemical studies on postvaccinal *Brucella* agglutinins in bovine serum. Amer. J. Vet. Res., 25: 325.

(101) Rossen, R. D., M. Councilman, K. C. Hsu, W. T. Butler, and H. M. Rose. 1968. Local-

ization of 11S external secretory IgA by immunofluorescence in tissues lining the oral and respiratory passages in man. J. Immunol., 100(4): 706.

(102) Sandberg, A. L., B. Oliveira, and A. G. Osler. 1969. Complement fixation by guinea pig gamma-1 immunoglobulins. Federation Proc., 28(2): 817. Abstr. no. 3112.

(103) Sanderson, C. J. 1968. The immune response to viruses in calves. I. Response to Murray Valley encephalitis virus. II. The response in young calves. J. Hyg. Cambridge, 66: 451-461.

(104) Sarwar, M., B. Campbell, and W. E. Petersen. 1964. Production of antibody in mammary gland of pregnant, non-lactating and lactating cows, evoked by polyvalent antigen with reference to, dosage and frequency of immunization. Canadian J. Comp. Med., 28(8): 183.

(105) Schoenaers, F., and A. Kaeckenbeeck. 1963. Initial phase of intestinal absorption of antibodies in new-born calves. Ann. Med. Vet., 107(2): 81.

(106) Schubothe, H. 1967. The paraproteinaemia-like features of cold and warm autoantibody anaemias. In Gamma Globulins. Proc. Third Nobel Symposium, June 12-17, Stockholm. J. Killander, ed. Interscience, New York.

(107) Schultze, H. E., and J. F. Heremans. 1966. Molecular Biology of Human Proteins. Vol. 1. Nature and Metabolism of Extracellular Proteins. Chap. 3, p. 904. Elsevier Publishing Co., New York.

(108) Seligman, M., C. Mihaesco, and G. Meshaka. 1966. Antigenic determinants common to human immunoglobulins G and M: Importance of conformational antigens. Science, 154: 790.

(109) Shemeleva, N. E., and A. Y. Kulberg. 1968. Antigen analysis of the submolecular structure of bovine gamma-globulin. Byul. Eksperim. Biol. i Med., 65(1): 84.

(110) Smith, A. N., and D. G. Ingram. 1966. Immunological response in young animals. II. Antibody production in calves. Canadian Vet. J., 6(9): 226.

(111) Smith, E. L. 1946. The immune proteins of bovine colostrum and plasma. J. Biol. Chem., 164: 345.

(112) Smith, E. L., and D. M. Brown. 1950. The sedimentation behavior of bovine and equine immune proteins. J. Biol. Chem., 183: 241.

(113) Smith, E. L., R. D. Greene, and E. Bartner. 1946. Amino acid and carbohydrate analysis of some immune proteins. J. Biol. Chem., 146: 359.

(114) Smith, E. L., and A. Holm. 1948. The transfer of immunity to the new-born calf from colostrum. J. Biol. Chem., 175: 349.

(115) Smith, H. W., J. A. O'Neil, and E. J. Simmons. 1967. The immune globulin content of the serum of calves in England. Vet. Record, 80(23): 664.

(116) South, M. A., M. D. Cooper, F. A. Wollheim, R. Hong, and R. A. Good. 1966. The IgA system. I. Studies of the transport and immunochemistry of IgA in the saliva. J. Exptl. Med., 123: 615.

(117) Spiegelberg, H., J. Prahl, and H. Grey. 1969. Structural studies of an IgD myeloma protein. Federation Proc., 28(2): 495. Abstr. no. 1322.

(118) Srubar, B. 1966. Specific colostral immunity in calves vaccinated against foot-and-mouth disease. II. Demonstration of immunity with the protection-test, and active immunity formation in calves after vaccination in the early post-natal period. Vet. Med. Praha, 11(9): 551.

(119) Steck, F. T. 1962. Transmission of γ-globulins to the newborn calf via the colostrum. Schweiz. Arch. Tierheilk., 104(9): 525, 593.

(120) Sterzl, J., and A. M. Silverstein. 1967. Developmental aspects of immunity. Advan. Immunology, 6: 337.

(121) Sullivan, A., and T. B. Tomasi. 1964. Studies on bovine serum and salivary γ-globulins. Clin. Res., 12: 452.

(122) Tomasi, T. B., Jr. 1969. Personal communications.

(123) Tomasi, T. B., Jr., E. M. Tan, A. Solomon, and R. A. Prendergast. 1965. Characteristics of an immune system common to certain external secretions. J. Exptl. Med., 121(1): 101.

(124) Tourville, D. R., R. H. Adler, J. Bienenstock, and T. B. Tomasi, Jr. 1969. The human secretory immunoglobulin system: immunohistological localization of γA, secretory "piece," and lactoferrin in normal human tissues. J. Exptl. Med., 129(2): 411.

(125) Wei, M. M., and A. B. Stavitsky. 1967. Molecular forms of rabbit antibody synthesized during the primary response to human albumin. Immunology, 12: 431.

(126) Weir, D. M. 1967. Handbook of Experimental Immunology. Sec. 1. F. A. Davis Co., Philadelphia.

(127) White, T. G. 1958. Further studies on a non-specific serum agglutinin. Dissertation Abstr., 18(4): 1220.

(128) Zarkower, A. 1967. Histamine in the cow: Pre- and post-parturition histamine concentrations in plasma, milk and tissue. Amer. J. Vet. Res., 28(127): 1751.

(129) Zarkower, A. 1967. Histamine in the cow: Effect of histamine and estradiol administration on protein concentration in milk. Amer. J. Vet. Res., 28(127): 1757.