Thiocyanations VI: Iron-catalyzed Thiocyanations of Unsaturated Acids and Esters[1]

R.J. MAXWELL and **L.S. SILBERT,** Eastern Regional Research Center, Federal Research, Science and Education Administration, U.S. Department of Agriculture, Philadelphia, Pennsylvania 19118

ABSTRACT

The effect of iron catalyst and the advantages of its use in thiocyanogen additions to a series of unsaturated acids and esters were studied. In the absence of catalyst, the deactivation effect of the carboxylic group on the double bond is observed up to and including the Δ^5 position, conversions to products are low, and the products in some cases are not the anticipated dithiocyanate adducts. These normally unreactive double bonds are induced to react with thiocyanogen by iron catalyst. Furthermore, for the catalyzed reactions of Δ^2 and Δ^3 acids and esters, the esters are found to be more reactive than the acids, although both produce trace to low yields of adducts. Single isolated bonds located in any position beyond Δ^3, including terminal, are thiocyanated rapidly and in high yield in the presence of iron catlyst. Methyl linoleate and methyl linolenate form ca. 80% of the tetrathiocyanate and hexathiocyanate adducts, respectively.

INTRODUCTION

The addition of thiocyanogen to olefinic compounds is a general method of preparation of *vic*-dithiocyanate adducts (1,2). This procedure, designated as the thiocyanogen value (T.V.), is also a classical AOCS method for determining the degree of unsaturation in fats and oils (3). The analytical utility of the procedure was originally derived from the nonequivalent reaction of thiocyanogen with polyenes compared to the stoichiometric addition of halogens to these same compounds. Values obtained from the thiocyanogen addition to fats, in combintation with the iodine value (IV), were used in an empirically derived formula that gave the relative amounts of oleic, linoleic, and linolenic acids present in the fat mixture. Although the empirical nature of thiocyanogen-olefin reactions was not clearly understood, it was pragmatically accepted for its utility.

In our continuing effort to elucidate the reaction of thiocyanogen with various types of alkenes and alkenoic compounds, we have recently reported (4,5) the following observations: (a) Under ionic reaction conditions (addition in the dark of heterolytically cleaved thiocyanogen in acetic acid or acetic acid-carbon tetrachloride solution), the expected *vic*-dithiocyanate (2, 5) (I, equation 1) is formed, together with significant amounts of adducts II-IV (4).

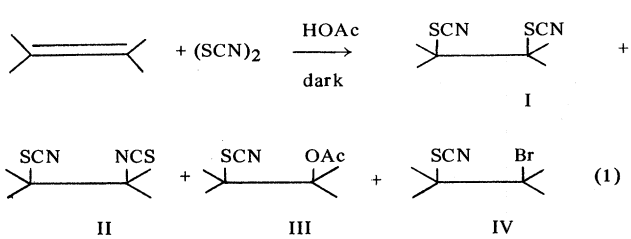

Adduct IV is derived from trace amounts of BrSCN, which arises from lead thiocyanate and bromine in the generation of thiocyanogen. (b) The course of the thiocyanation reaction is strongly solvent dependent (5). Adduct II (equation 1) was isolated as the major stereospecific product in nonpolar solvents (benzene, $CHCl_3$, CH_2Cl_2), whereas the principal component of the product mixture in acetic acid or acetonitrile is the stereospecific dithiocyanate adduct I. (c) A dramatic change in product composition (from that described in b above) was observed with model olefins when the addition was carried out in benzene solution in the presence of catalytic amounts of ferric thiocyanate. [Occupational Safety and Health Administration (OSHA), under Standard 29 CFR 1910-1000, Table Z-2, has stated that benzene is a carcinogen.] This method resulted in the stereospecific formation of *vic*-dithiocyanate I (equation 1) as the exclusive product (5). This shift in adduct formation from II to I induced by iron salts suggested a reexamination of the thiocyanogen reaction with functionally substituted olefins under similar conditions. This paper reports our results of iron-catalyzed thiocyanation of a series of unsaturated acids and esters.

EXPERIMENTAL PROCEDURES

Materials

The purity and source of unsaturated compounds used in this study were the following: methyl oleate and methyl elaidate were each 99% from Applied Science Laboratories, State College, PA; methyl linoleate and methyl linolenate were each 99% from Nu-Chek-Prep, Elysian, MN; and *cis*-3-hexene (97% *cis* 3% *trans*) and *trans*-3-hexene (99%) were from Chemical Samples Co., Columbus, OH. *trans*-2-Hexenoic and *trans*-3-hexenoic acids were obtained from Research Organic/Inorganic Chemical Corp., Belleville, NJ; the Δ^2-acid was purified by crystallization and the Δ^3-acid by distillation, and both acids converted to methyl esters.

The unsaturated acids and esters listed in Table I were examined for isomeric purity by gas liquid chromatography (GLC), infrared (IR), and nuclear magnetic resonance (NMR) prior to use. Chemical derivatization was employed to establish the purity of *cis*- and *trans*-3-hexene by a method described in a previous publication (5). Lead thiocyanate, used to generate thiocyanogen, was freshly prepared prior to use in accordance with a published procedure (7). Nanograde benzene (Mallinckrodt Chemical, St. Louis, MO) was used in all experiments. Ferric thiocyanate was freshly prepared by a reported method (8) and stored under vacuum in the dark when not in use. 2,6-Di-5-butyl-4-methylphenol (Aldrich Chemical, Metuchen, NJ), a free radical inhibitor, was used as received. Iron powder, -325 mesh, was obtained from the Ventron Corp. (Danvers, MA).

Thiocyanogen Addition Experiments

Preparation of the thiocyanogen reagent and the methods used to carry out its addition to olefins have been described in detail elsewhere (4,5). Control and catalyzed additions to each olefinic acid or ester were carried out in benzene solution simultaneously with aliquots from the same batch of thiocyanogen reagent, as previously described (5).

[1]Presented at the AOCS Meeting, Chicago, September 1976.

TABLE I

Directive Influence of $Fe(SCN)_3$ on Thiocyanogen Addition to Unsaturated Compounds in Benzene

R = H,CH_3	% Thiocyanogen addition[a] Control[b,c] H	Control[b,c] CH_3	$Fe(SCN)_3$[d] H	$Fe(SCN)_3$[d] CH_3	Method of analysis[e]
$CH_3(CH_2)_2CH{=}CHCO_2R$	0	0	~1	8	GLC
$CH_3CH_2CH{=}CHCH_2CO_2R$	0	0	4	28	GLC
$CH_3CH{=}CH(CH_2)_2CO_2R$		13[f]		90	GLC
$CH_3(CH_2)_{11}CH{=}CH(CH_2)_3CO_2R$(*cis*)		43[f]		90	NMR
$CH_3(CH_2)_{10}CH{=}CH(CH_2)_4CO_2R$(*cis*)	70	70	90	90	NMR
$CH_3(CH_2)_7CH{=}CH(CH_2)_7CO_2R$(*cis*)	60	70	90	91	IV, NMR
$CH_3CH_2CH{=}CHCH_2R$(*cis*)		72		90[g]	GLC
$CH_3(CH_2)_7CH{=}CH(CH_2)_7CO_2R$(*trans*)	50	50	85	85	NMR
$CH_3CH_2CH{=}CHCH_2R$(*trans*)		50		83[g]	GLC
$CH_2{=}CH(CH_2)_8CO_2R$		~2		100	GLC
$CH_3(CH_2)_4CH{=}CHCH_2CH{=}CH(CH_2)_7CO_2R$		53		86	IV, NMR
$CH_3CH_2CH{=}CHCH_2CH{=}CHCH_2CH{=}CH(CH_2)_7CO_2R$		37		84	IV, NMR

[a]Reactions in benzene solution in the ratio 1.2 mmol $(SCN)_2$/1.0 mmol double bond carried out in the dark for 22 hr.

[b]Yields obtained in the absence of iron are the maximum observed regardless of amount of excess thiocyanogen used.

[c]Except where noted the product composition is 65% *vic*-isothiocyanate thiocyanate adduct (II) and 35% *vic*-dithiocyanate adduct (I).

[d]The product from the $Fe(SCN)_3$ reaction is pure *vic*-dithiocyanate I.

[e]Abbreviations: GLC = gas liquid chromatography; NMR = nuclear magnetic resonance; IV = iodine value.

[f]These compounds were not fully characterized; however, IR and NMR established that they were not *vic*-dithiocyanates.

[g]Quantitative conversions of olefins to adduct I may be obtained with a larger excess of thiocyanogen.

Each reaction mixture was stirred for 22 hr, quenched with sodium thiosulfate solution to remove excess thiocyanogen, filtered to remove solids, and examined for composition without further purification.

Yields and product composition for the product mixtures from *cis*- and *trans*-3-hexene and for those derived from hexenoic acids or esters were obtained in the following manner: A weighed amount of methyl stearate, used as the internal standard for GLC analysis, was added to each of the crude reaction mixtures. The mixtures were analyzed for adducts I and II and for total yield by GLC (8 ft x 3/16 in. SS column containing 15% HI-EFF DEGS on 50/60 mesh Anakrom ABS).

The crude reaction products from the hexadecenoic acids and esters were examined by IR (Perkin-Elmer Model 457 grating infrared spectrophotometer) and by NMR (Jeolco Model 60 H spectrometer) with techniques described elsewhere (5,9).

The crude product mixtures from the catalyzed and noncatalyzed thiocyanogen additions to methyl oleate, methyl linoleate, and methyl linolenate were analyzed directly by two separate techniques: examination of their spectra by NMR and reaction with iodine monochloride by use of the Wijs Method (10) to obtain the IV. Results from these determinations gave the extent of remaining unreacted double bonds in the crude thiocyanated ester products. From these data the molar ratio of the thiocyanated adducts present in each sample was calaculated. The example of methyl linolenate was calculated on the basis that two of the three double bonds react at least 40 times faster than the third (11). Hence, thiocyanations exceeding 66.7% of theory indicate additions to the third double bond.

Kinetic Experiments

Five separate experiments were carried out simultaneously for this determination. The compositions of these experiments are described in a-e below. Each experiment employed 0.84 g (0.01 mol) of each olefin, 0.25 g methyl stearate as internal standard, and 300 mg of 2,6-di-5-butyl-4-methylphenol as a free radical inhibitor.

a. *cis*-3-Hexene and 10 ml benzene; b. *cis*-3-hexene, 10 ml benzene and $Fe(SCN)_3$ (0.7 g, 0.003 mol); c. *trans*-3-hexene and 10 ml benzene; d. *trans*-3-hexene, 10 ml benzene and $Fe(SCN)_3$ (0.7 g, 0.003 mol); and e. *trans*-3-hexene, 10 ml benzene and iron powder (0.15 g, 0.0027 mol).

Freshly prepared thiocyanogen (0.012 mol in 80 ml benzene) was delivered by syringe to each flask, blanketed with a nitrogen atmosphere, and stirred magnetically. The temperature was maintained at 25 C throughout the experiments. Aliquots were removed at timed intervals, quenched with conc. sodium thiosulfate solution, and analyzed by GLC without further workup. Appearances of products I and II were measured against the internal standard. The half-lives ($t_{1/2}$) for the catalyzed and noncatalyzed experiments were calculated by use of standard equations (12).

RESULTS

Monounsaturated acids and esters were thiocyanated to determine double bond reactivity at increasing distances from the electronegative carboxyl group, ranging from Δ^2 (adjacent) to Δ^9 (isolated internal) to terminal (isolated). Nonsubstituted model olefins, *cis*- and *trans*-3-hexenes, were included for comparison with the isomeric oleic and elaidic acids. Methyl linoleate and methyl linolenate were studied to provide examples of multiple unsaturated esters containing a skipped diene and triene system, respectively. Conversions obtained for these thiocyanations in the presence and absence of ferric thiocyanate are assembled in Table I.

The rates at which isolated internal double bonds add thiocyanogen in the presence and absence of the iron catalyst were conveniently measured with the 3-hexenes.

The rates calculated in terms of half-lives (time at 50% conversions of olefins to products) are recorded in Table II.

DISCUSSION

Thiocyanogen addition to olefins under heterolytic conditions is regarded as an electrophilic reaction that is mechanistically analogous to halogenation (13) and peroxy acid epoxidation (13,14). In this respect, it should be subject to the same substituent effects that control rates in the latter two reactions. These effects are rate depressions due to the electroegative carboxyl group (15), lower reactivity of terminal than of internal double bonds (16), and ter additions to *cis* than to *trans* olefins (17,18). Our results (Table I) indicate that noncatalyzed thiocyanations of fatty acids and esters in benzene follow the rules for the electrophilic additions described above. For example, the diminished electron density of double bonds in the vicinity of the carboxyl groups, as are present in Δ^2 and Δ^3 acids and esters, completely suppressed addition of thiocyanogen. This influence of the carboxyl group was also experienced by the double bond as far down the chain as the Δ^5 position (13% reaction for Δ^4 and 43% for Δ^5 compounds). The low reactivity of thiocyanogen toward terminal olefins was demonstrated by use of methyl-10-undecenoate. Conversion to a mixture of adducts I and II with this olefin was less than 2%. The third aspect of electrophilic addition reactions, rate differences between *cis-trans* pairs, was determined when the half-lives ($t_{1/2}$) of the reaction with the isomeric 3-hexenes were measured in benzene solution (Table II). *cis*-3-Hexene was found to react four times faster than *trans*-3-hexene with thiocyanogen. When these results are extrapolated to the isomeric oleic and elaidic acids, the differences in conversions to products (50% for elaidic and 70% for oleic) are also explained since the slow rate of addition to *trans* olefin is also accompanied by a slow decomposition of thiocyanogen (4,5).

From the previous discussion it is evident that thiocyanogen reacts in a manner analogous to other electrophilic reagents, although its chemistry is more complex than that of structurally simpler reagents, such as the halogens. The differences between halogens and thiocyanogen are due in part to the ambident nature of thiocyanate anion, the lack of reactivity of the reagent toward electron-deficient double bonds, and the strong influence of solvent on the product outcome. Earlier investigators have proposed a two-step mechanism to account for the noncatalyzed addition of thiocyanogen to alkenes, analogous to bromine addition reactions (4,6,9,15). However, it is not evident from the simple reaction pathway why such differences arise between these two reagents. We propose that the reaction involves additional details as set forth in equation 2.

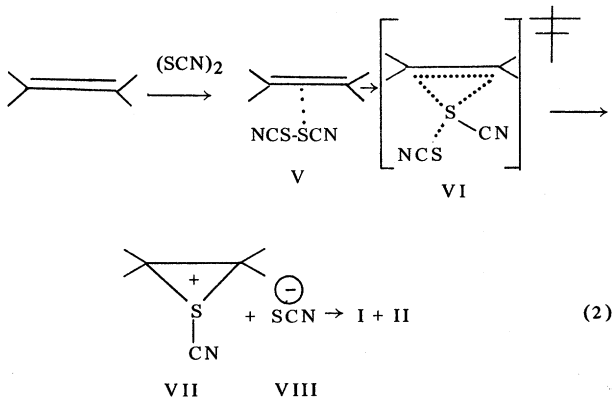

(2)

TABLE II

Half-Lives of Catalyzed and Noncatalyzed Thiocyanogen Additions to Hexenes[a]

Olefin	Catalyst	Half-life at 25 C
cis-3-Hexene	None	11 hr
	$Fe(SCN)_3$	<15 min[b]
trans-3-Hexene	None	44 hr
	$Fe(SCN)_3$	<15 min[b]
	Fe°[c]	<15 min[b]

[a]Reactions in benzene in the ratio of 1.2 mmol $(SCN)_2$/1.0 mmol olefin carried out in the dark.

[b]Reactions complete in 15 min.

[c]-325 Mesh iron powder.

An equilibrium charge-transfer complex V occurs first between a sulfur atom of thiocyanogen and the olefin, in analogy with bromine-olefin interactions (19-21). This complex gives rise to transition state VI by simple electron rearrangement. However, this rearrangement fails to occur in the case of the Δ^2-Δ^4 acids and esters because of the electron-deficient nature of the double bonds. The transition state VI proceeds along the reaction's pathway to intermediate VII, a species supported by the existence of stable episulfonium salts (22,23) of analogous structure. After this stage in the reaction sequence, the ratio of I/II in the product mixture is determined. Because of the ambident nature of the thiocyanate anion ($\bar{S}$-C≡N↔S=C=$\bar{N}$), attack upon cation VII is possible from either the nitrogen or sulfur atom of anion VIII. The I/II ratio formed in reaction is determined principally by the association of VIII with the solvent employed (5). Nonpolar solvents such as benzene associate with the sulfur terminus of VIII, leading to formation of II by nitrogen attack. The opposite condition of a nitrogen solvated by hydrogen bonding prevails in acetic acid, leading to adduct I as the preferred product (4).

Some of the above considerations concerning equation 2 regarding electrophilic addition of thiocyanogen to alkenes are dramatically altered when a catalytic amount of ferric thiocyanate or iron powder is employed in these reactions. For instance, under these conditions normally unreactive alkenoic (Δ^2, Δ^3, Δ^4) acids and esters add varying amounts of thiocyanogen, methyl-10-undecenoate is quantitatively converted to the adduct I, and rates for the catalyzed addition to internal *trans* olefins are increased at least 170-fold (Table II).

The ferric salt catalyst also provided an unexpected probe for differentiation of the polarities between carboxylic acid and ester groups in benzene. The Δ^2 and Δ^3 acids were less reactive (1% and 4% conversions, respectively) than their corresponding esters (8% and 28% conversions, respectively). The lower reactivity of the carboxylic acids compared to that of esters may be due to further enhancement in positive character of double bonds in close proximity to the carboxyl group.

In addition to the changes described above, the ferric salt-catalyzed reactions also produce significant changes in the products obtained. When these catalyzed experiments are carried out in benzene solution, the only product obtained, regardless of the substituents or double bond position in the olefin, is the dithiocyanate adduct I, whereas in noncatalyzed experiments adduct II is the major product. Quantitative formation of adduct I from simple alkenes in the metal reactions is attributed to the exceedingly fast rates involved (Table II). High conversions must also result from the high rate of addition relative to the rate of loss of thiocyanogen through decomposition.

Finally, the greater efficacy of the metal-catalyzed thio-

cyanation compared to that of the noncatalyzed addition in benzene is also evident with methyl linoleate and methyl linolenate (Table I). The data, obtained separately from titrations of thiocyanated products by the Wijs method and from NMR analysis, indicate thiocyanogen added to only one double bond of both esters in the absence of iron. However, the metal-catalyzed reactions with the polyenoic esters resulted in 85% conversion by weight to thiocyanated adducts. This degree of addition represents formation of an 80:20 mole ratio mixture of tetrathiocyanate-dithiocyanate adducts from methyl linoleate and approximately 80:20 mixture of hexathiocyanate-tetrathiocyanate adducts from methyl linolenate. It is anticipated that ratios of thiocyanogen per double bond exceeding 2:1 would lead to nearly complete thiocyanation (5). Catalysis thus affords the first opportunity to isolate fully thiocyanated products from these esters.

The dramatic rate increases (Table II) and compositional changes in products observed in the catalyzed addition to olefins (Table I) are interpreted on the basis of the initial participation of transition state VI and intermediate cation VII with the ferric ion. Polarization of thiocyanogen by metal-thiocyanogen interactions enhanced the reagent's electrophilicity and consequently increases the reaction rate with the electron-deficient double bond in the Δ^2-Δ^5 acids and esters (Table I). Control of the next step of this reaction sequence between VII and VIII also is determined by metal-ligand interactions. Many workers who have investigated homogeneous metal-thiocyanate complexes have established that the primary interactions generally occur between the metal cation and the nitrogen atom of the thiocyanate anion (24). Nitrogen complexation leaves only the noncomplexed sulfur atom available for attack upon intermediate VII. Consequently, metal-nitrogen coordination, together with polarization of sulfur in the final step of the reaction, succeeds in producing the dithiocyanate adducts (I) as sole products, even for the resistant Δ^2 ester.

ACKNOWLEDGMENTS

A.J. Valicenti of the Hormel Institute provided petroselinic acid, methyl petroselinate, and methyl 5-octadecenoate used in this study. D.A. Konen of this laboratory prepared methyl 4-hexenoate.

REFERENCES

1. Kaufmann, H.P., "Newer Methods of Preparative Organic Chemistry," Interscience, New York, 1948.
2. Bacon, R.G.R., in "Organic Sulfur Compounds," Vol. I, Edited by N. Kharasch, Pergamon Press, New York, 1966, Chapter 27.
3. "Official and Tentative Methods of the American Oil Chemists' Society," Third Edition, AOCS, Champaign, IL, 1976, Thiocyanogen Method, Cd 2-38.
4. Silbert, L.S., J.R. Russell, and J.S. Showell, JAOCS 50:415 (1973).
5. Maxwell, R.J., L.S. Silbert, and J.R. Russell, J. Org. Chem. 42:1520 (1977).
6. McGhie, J.F., W.A. Ross, F.J. Julietti, and B.E. Grimwood, J. Chem. Soc. 4638 (1962).
7. Lambou, M.G., and F.G. Dollear, Oil Soap 23:97 (1946).
8. Forster, D., and D.M.L. Goodgame, J. Chem. Soc. 268 (1965).
9. Maxwell, R.J., P.E. Pfeffer, and L.S. Silbert, J. Org. Chem. 42:1520 (1977).
10. "Official and Tentative Methods of Analysis," AOAC, Washington, DC, 1940, Method 3120-3121, p. 430.
11. Swern, D., and W.E. Parker, J. Org. Chem. 22:583 (1957).
12. Livingston, R., in "Technique of Organic Chemistry," Vol. III, Part I, Edited by A. Weissberger, Interscience Pub. Inc., New York, 1961, p. 66.
13. Fahey, R.C., in "Topics in Stereochemistry," Edited by E.L. Eliel and N.L. Allinger, Vol. 3, Interscience Pub., John Wiley and Sons, Inc., New York, 1968, pp. 237-342.
14. Swern, D., "Organic Peroxides," Vol. 2, Wiley-Interscience, John Wiley and Sons, Inc., New York, 1971, Chapter 5, p. 355.
15. Guy, R.G., R. Bonnett, and D. Lanigan, Chem. Ind. 1702 (1969).
16. Guy, R.G., and J.J. Thompson, Ibid. 1499 (1970).
17. Plisov, A.K., and V.I. Lakizo, J. Org. Chem. USSR 4(5):787 (1968) (English trans).
18. Plisov, A.K., and V.I. Lakizo, Ibid. 2(3):399 (1966).
19. Dubois, J.E., and F. Garnier, Chem. Commun. (London) 241 (1968).
20. Dubois, J.E., and F. Garnier, Spectrochim. Acta 23A:2279 (1967).
21. Dubois, J.E., and F. Garnier, Tetrahedron Lett. 36:3047 (1966).
22. Pettitt, D.J., and G.K. Helmkamp, J. Org. Chem. 28:2932 (1963).
23. Pettitt, D.J., and G.K. Helmkamp, Ibid. 29:2702 (1964).
24. Burmeister, J.L., in "Chemistry and Biochemistry of Thiocyanic Acid and Its Derivatives," Edited by A.A. Newman, Academic Press, New York, 1975, Chapter 2, p. 68.